PRO Painting Techniques

CRAFTSMAN SECRETS — INSTALLING A HALF-MORTISE LOCK

Woodsmith®

www.Woodsmith.com

Vol. 25 / No. 145

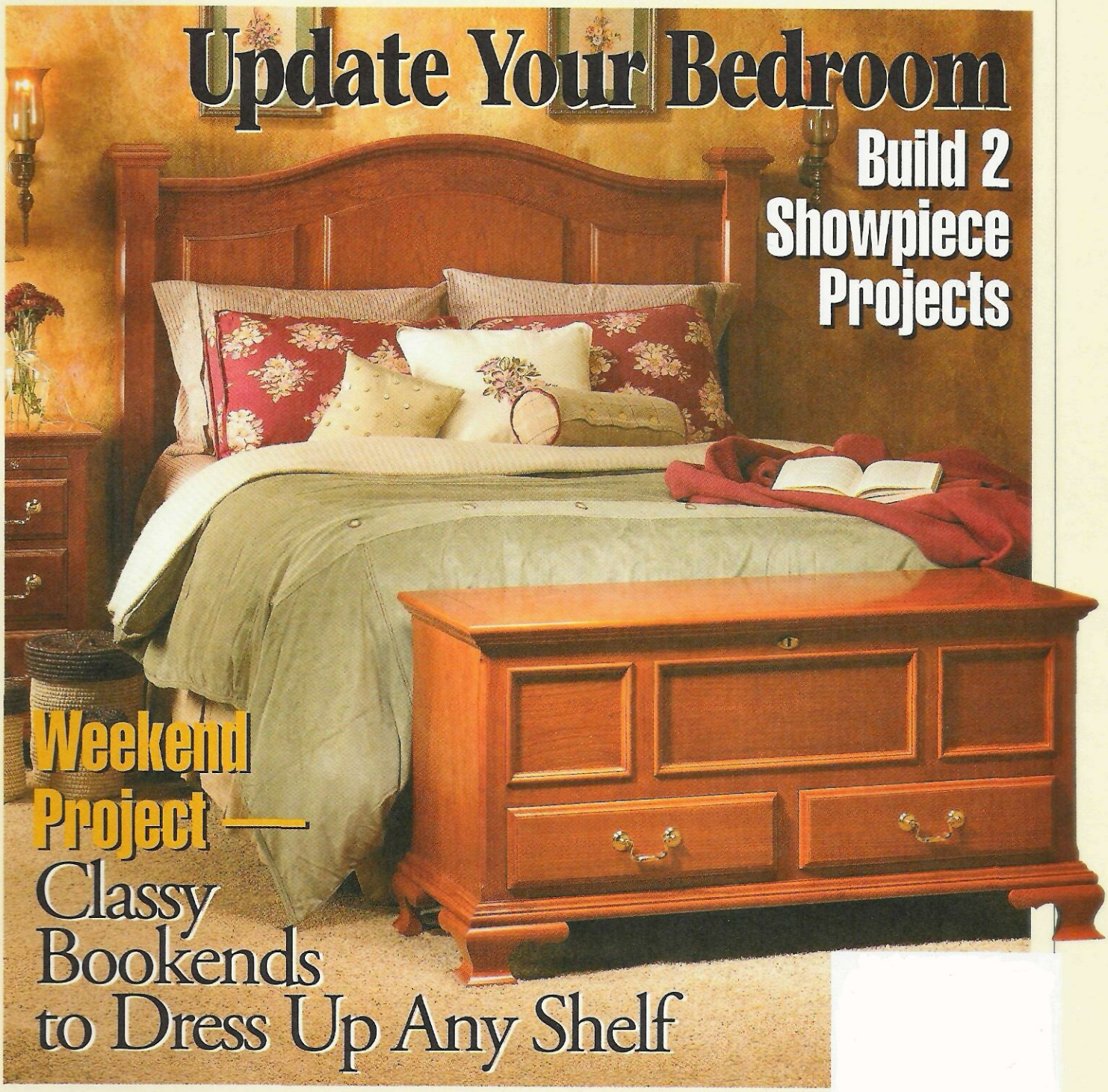

Update Your Bedroom

Build 2 Showpiece Projects

Weekend Project — Classy Bookends to Dress Up Any Shelf

A Publication of August Home Publishing

Woodsmith

No. 145 February, 2003

Publisher Donald B. Peschke
Editor Terry J. Strohman
Senior Editor Jon Garbison
Assistant Editors Ted Raife, Phil Huber
Art Director Todd Lambirth
Senior Illustrators David Kreyling, Dirk Ver Steeg, Harlan V. Clark
Graphic Intern Nathan Robertson

CREATIVE RESOURCES
Creative Director: Ted Kralicek • *Sr. Project Designers:* Ken Munkel, Kent Welsh, Ryan Mimick, Chris Fitch • *Shop Craftsmen:* Steve Curtis, Steve Johnson • *Sr. Photographer:* Crayola England

SPECIAL PUBLICATIONS
Corp. VP: Douglas L. Hicks • *Art Director:* Douglas A. Flint • *Senior Graphic Designer:* Chris Glowacki • *Senior Editor:* Craig Ruegsegger • *Asst. Editor:* Joel A. Hess • *Graphic Designers:* Vu Nguyen, Jonathan Eike • *Edit. Intern:* Cindy Thurmond

CIRCULATION
Subscriber Services Director: Sandy Baum • *New Business Circ. Mgr.:* Wayde Klingbeil • *Multi-media Promotions Manager:* Rick Junkins • *Promotions Analyst:* Patrick Walsh • *Renewal Mgr.:* Paige Rogers • *Billing & Collections Manager:* Rebecca Cunningham • *Circ. Marketing Analysts:* Kris Schlemmer, Paula M. DeMatteis • *Sr. Graphic Designers:* Mark Hayes, Robin Friend

CORPORATE SERVICES
VP of Finance: Mary R. Scheve • *Controller:* Robin K. Hutchinson • *Sr. Account.:* Laura J. Thomas • *Accts. Payable:* Mary J. Schultz • *Accts. Receivable:* Margo Petrus • *Production Dir.:* George Chmielarz • *Electronic Pub. Dir.:* Douglas M. Lidster • *System Administrator:* Cris Schwanebeck • *PC Maint. Tech.:* Robert D. Cook • *Pre-press Image Specialists:* Troy A. Clark, Minniette Johnson • *New Media Mgr.:* Gordon C. Gaippe • *Web Site Art Dir.:* Gene Pedersen • *Web Server Admin.:* Carol Schoeppler • *Web Content Mgrs.:* David Briggs, Sue M. Moe • *Web Designer:* Kara Blessing • *Research Coordinator:* Nick Jaeger • *Pro. Development Dir.:* Michal Sigel • *H.R. Asst.:* Kirsten Koele • *Office Mgr.:* Natalie Lonsdale • *Facilities Mgr.:* Kurt Johnson • *Receptionist:* Jeanne Johnson • *Mail Room/Delivery:* Lou Webber

WOODSMITH MAIL ORDER
Operations Director: Bob Baker • *Cust. Service Mgr.:* Jennie Enos • *Warehouse Supr.:* Nancy Johnson • *Buyer:* Linda Jones • *Admin. Assist.:* Nancy Downey • *Sr. Cust. Serv. Reps.:* Tammy Truckenbrod, Anna Cox, April Revell, Deborah Rich • *Cust. Serv. Reps.:* Valerie Jo Riley, Kim Harlan • *Warehouse:* Sylvia Carey

WOODSMITH STORE
Mgr.: Dave Larson • *Merchandise Marketing Mgr.:* John Siberell • *Asst. Manager:* Tim Thelen • *Sales Staff:* Wendell Stone, Larry Morrison, Mark Johnson, Gregory Kauzlarich, Brian McCallum • *Office Mgr.:* Vicki Edwards

Woodsmith® (ISSN 0164-4114) is published bimonthly (Feb., Apr., June, Aug., Oct., Dec.) by August Home Publishing Company, 2200 Grand, Des Moines, IA 50312.
Woodsmith® is a registered trademark of August Home Publishing.

Copyright© 2003 August Home Publishing Company. All rights reserved.

Subscriptions: Single copy: $4.95. One year subscription (6 issues), $24.95. (Canada/International add $10 per year, U.S. funds.)
Periodicals Postage Paid at Des Moines, IA and at additional offices. USPS/Perry-Judd's Heartland Division Automatable Poly.
Postmaster: Send change of address to *Woodsmith*, Box 37112, Boone, IA 50037-2112.
Subscription Questions? Write to *Woodsmith*, P.O. Box 842, Des Moines, IA 50304-9961 or call 1-800-333-5075, 8:00 am to 5:00 pm, Central Time, weekdays. Or send an email to: orders@woodsmith.com
Email: woodsmith@woodsmith.com
World Wide Web: http://www.woodsmith.com

Printed in U.S.A.

AUGUST HOME PUBLISHING COMPANY

EDITOR'S COLUMN

SAWDUST

Last year, in Issue No. 139, we featured a bedside chest. Since then, we've received a number of requests asking for plans for furniture pieces to fill out the set. In this issue, we have two projects that fit the bill.

BLANKET CHEST. We started with the blanket chest shown on page 26. It shares many of the same features as the bedside chest — bracket feet, traditional frame and panel construction, and routed drawer fronts. All in all, it's a rather straightforward project as far as the joinery goes. For the most part, it's just stub tenons and grooves.

Well, we ended up with a great project for the *foot* of the bed. So we decided to design a woodworking project for the *head* of the bed as well.

HEADBOARD. I thought it might be nice to try and create an arch-top frame and panel headboard — one that would incorporate some of the details included in the blanket chest.

Making a curved rail may sound like a complicated procedure. But it's really pretty simple. All you need is a band saw, a drum sander, and a little handwork with a file and sandpaper.

As for joining the rail to the stiles of the frame, a curved top rail could mean some rather tricky cutting and fitting — if you're using traditional mortise and tenon joinery.

But with this project we took a different approach. The entire frame is held together with splines and grooves. Not only does this make assembling the frame easier, it also gave us an opportunity to do something different with the panels. Instead of using traditional panels that fit into grooves, the headboard panels "float" on top of the frame and are held in place with splines.

If you would like to learn more about this technique, check out the article that starts on page 6.

Terry

SAFETY CONCERN

As we were putting the finishing touches on this issue, I received an email from a reader who warned us about the dangers of children getting trapped in chests. (Thanks, Denis.)

Please, if you plan on building the blanket chest, I would strongly suggest that you drill some air holes in the upper rail in the back of the chest.

Also, since this project wasn't designed for children, there is no provision for keeping the lid from dropping down. So as an added precaution, if children are around, I would recommend that you *keep the chest locked* and put the key in a safe place.

Woodsmith Readers' Gallery

Visit other *Woodsmith* subscribers' workshops, and see photos of the projects they've built. It's all online in the new Readers' Gallery on the *Woodsmith* web site: **www.Woodsmith.com**

We want you to be part of the Readers' Gallery! To submit photos of your favorite *Woodsmith* projects or views of your shop, follow the instructions you'll find at the Reader's Gallery.

A LOOK INSIDE

CONTENTS

Features

Arch-Top Headboard 6

This heirloom-quality project features a handsome arched molding and matching solid wood panels. But don't worry, we'll show you the simple steps used to build it.

Straight-Top Headboard 15

We've simplified the design of the arch-top headboard for a classic-looking straight-top version with all the same fine details.

Arched Molding 16

If you thought making curved molding meant having years of experience and industrial-sized equipment, take a look at the straightforward technique we came up with.

Arch-Top Bookends 18

These simple bookends allow you to try out some of the same techniques used on the arch-top headboard. And with some scrap hardwood and MDF you can build them in a weekend.

5 Quick Pro Paint Tips 22

Here are five fast tips you can use the next time you finish a project with spray paint. Plus, check out two "canned" faux finishes.

Installing a Half-Mortise Lock 24

Adding the right hardware, like a half-mortise lock, can turn an ordinary project into an heirloom. And we'll show you how.

Paneled Blanket Chest 26

A paneled front, dovetailed drawers that stand proud and bracket feet give this blanket chest an impressive look.

Departments

Tips & Techniques 4

Shop Notes 23

Sources 35

Arch-Top Headboard *page 6*

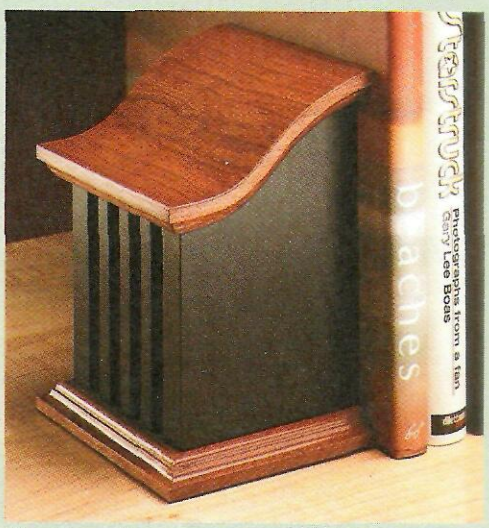

Bookends *page 18*

Paneled Blanket Chest *page 26*

TIPS & TECHNIQUES

Sorting Tray

I have a lot of bins filled with screws, nuts, bolts, and other odds and ends. Sorting through the bins for just the right part can be a messy ordeal. So to keep things under control, I built this sorting tray.

The tray is nothing more than a shallow, three-sided box. As you can see in the photo, what's unique is that the open side of the box has a PVC pouring channel.

There's not much to building the tray. The bottom is made from 3/4" plywood with a wide, shallow rabbet cut on one end, as shown in Fig. 1. The sides are made with 1/4"-thick hardwood and are glued to the sides of the tray bottom, (Fig. 1b).

The pouring channel is simply a piece of 1 1/2" I.D. PVC pipe cut in half lengthwise on the band saw. The channel is attached to the rabbet in the tray with countersunk screws.

I cut a piece of 1/8" hardboard to make a liner for the tray. It's long enough to extend over the PVC slightly. This way, the parts you've sorted can't slide back into the tray, as shown in Fig. 2.

Finally, I added a screw eye to the back so I could hang the tray on the wall above my bench.

John Frederick
Apache Junction, Arizona

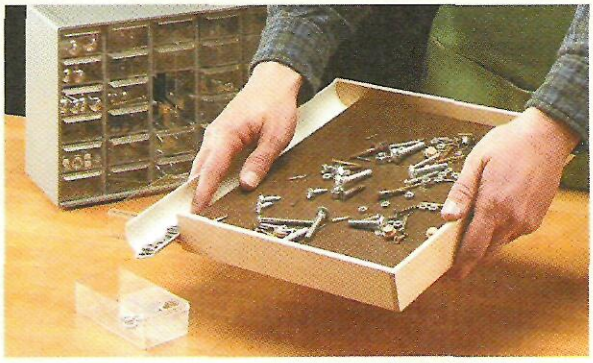

FREE
Online Tips

If you'd like even more woodworking tips, there's a simple solution. Just visit us at our web site and sign up to receive a free tip via email every week.

www.woodsmith.com

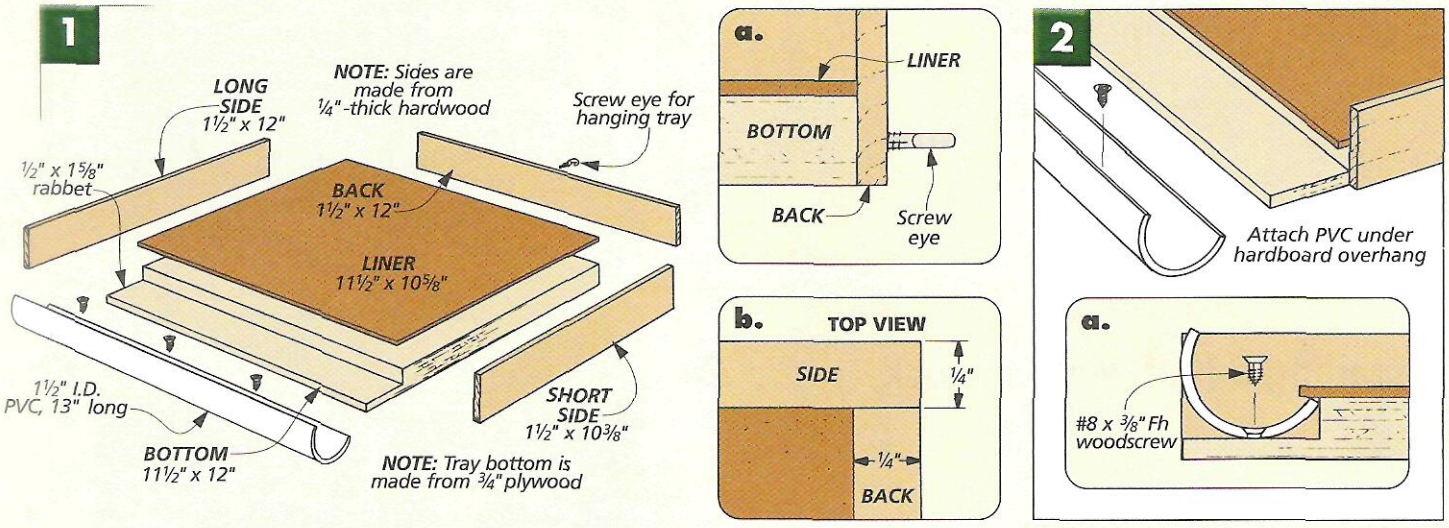

SUBMIT YOUR TIPS

If you have an original shop tip, we would like to hear from you and consider publishing your tip in one or more of our publications. Just write down your tip and mail it to: *Woodsmith,* Tips and Techniques, 2200 Grand Avenue, Des Moines, Iowa 50312. Please include your name, address, and daytime phone number in case we have any questions. If you would like, FAX it to us at 515-282-6741 or send us an email message at: woodsmith@woodsmith.com. We will pay up to $200 if we publish your tip.

Finishing Baster

On finishing jobs, I needed a way to mix precise amounts of finish to get just the right color.

So I bought an inexpensive turkey baster at the grocery store. Be sure to get one that has 1/4 oz. graduations on the side, as you can see in the photo below.

This method is also less messy than trying to pour finish from a can.

Geoffrey Carlson
Mancos, Colorado

Hole Saw Sander

On a recent project I needed to sand a curved workpiece, but I didn't have a drum sander in the right size. So I came up with an inexpensive solution. I wrapped a hole saw with some adhesive-backed sandpaper, as you can see in the photo to the right.

Then to keep the teeth of the hole saw from marring the workpiece, I made an auxiliary table that clamps to my drill press table. It's simply a piece of plywood with a U-shaped cutout that wraps around the "hole saw sander," as shown in the drawing below.

Note: This technique only works on materials that are 1" thick or less.

Mark Jaramillo
Belen, New Mexico

Composite Fence

Having a good, straight fence is important for router work. While UHMW plastic is ideal, it's hard to find and expensive. I found a good substitute at the home center: composite decking (*Trex*).

What's so great about this material is that it doesn't warp — it stays flat and straight. And it cuts easily on the table saw with a carbide blade. You can even plane it just like real wood.

Once the surface texture is planed smooth, composite decking works great for the sliding faces of a router table, as in Fig. 1.

Or you can make a simple fence that clamps to a router table, as shown in Fig. 2. To eliminate flexing, screw two pieces together in an L-shape. Then cut an opening in each fence piece for the router bit.

Stanley Krasovic
Honesdale, Pennsylvania

▲ *Cut and plane composite decking just like real wood.*

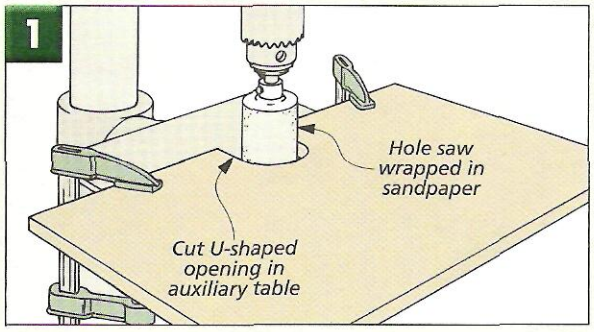

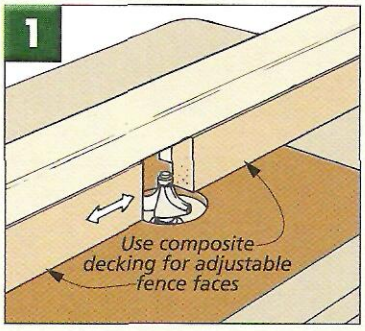

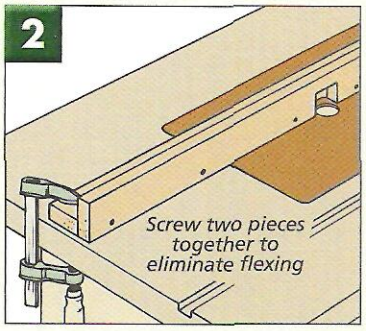

Zero-Clearance Cards

While cutting thin parts on my band saw, a piece fell through the insert. Not only was the piece ruined, it could dislodge the blade from the lower guides.

I found a simple solution to the problem in my wallet. I made a handy zero-clearance opening with some spare business cards. I taped two cards on the table of the saw on either side of the blade, as you can see in Fig. 1. Best of all, the cards are so thin they don't interfere with the operation of the fence.

Cary Christensen
Ankeny, Iowa

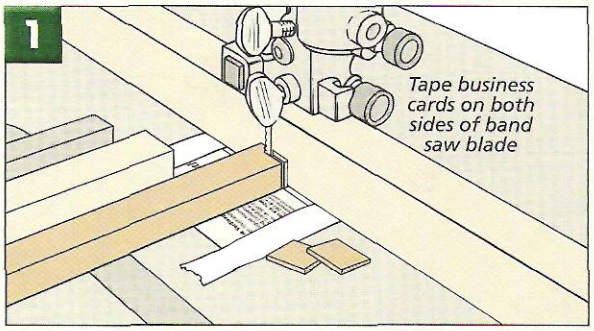

See-Through Finish Repair

Keeping an assortment of scratch remover pens on hand is a great way to make touchups during finishing or for repair work. However, picking the best match between my collection of pens and an existing finish has always been a trial and error process. Opening up the pens so many times risks having them dry out.

I've come up with a easier way to select the right pen. Make large-sized color samples on a sheet of acetate (the kind of plastic film used for overhead presentations). I grouped the colors by pen manufacturers. Next to each sample, write the name of the color, as you can see in the photo.

By holding the set of color patches next to a project, I can easily make the best repair choice without removing a cap.

Larry Morse
Framingham, Massachusetts

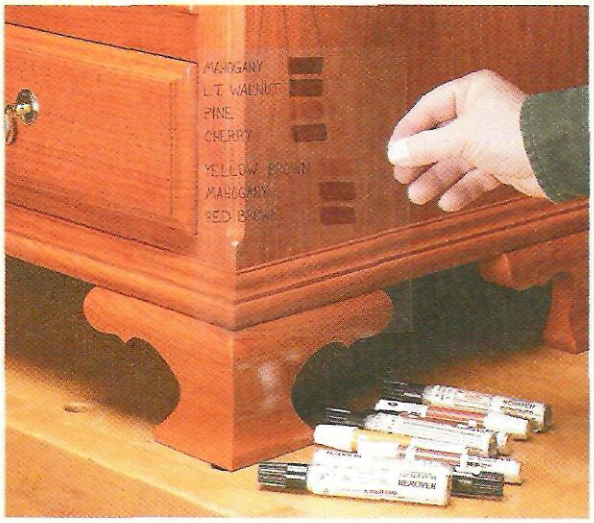

HEIRLOOM PROJECT

ARCH-TOP HEADBOARD

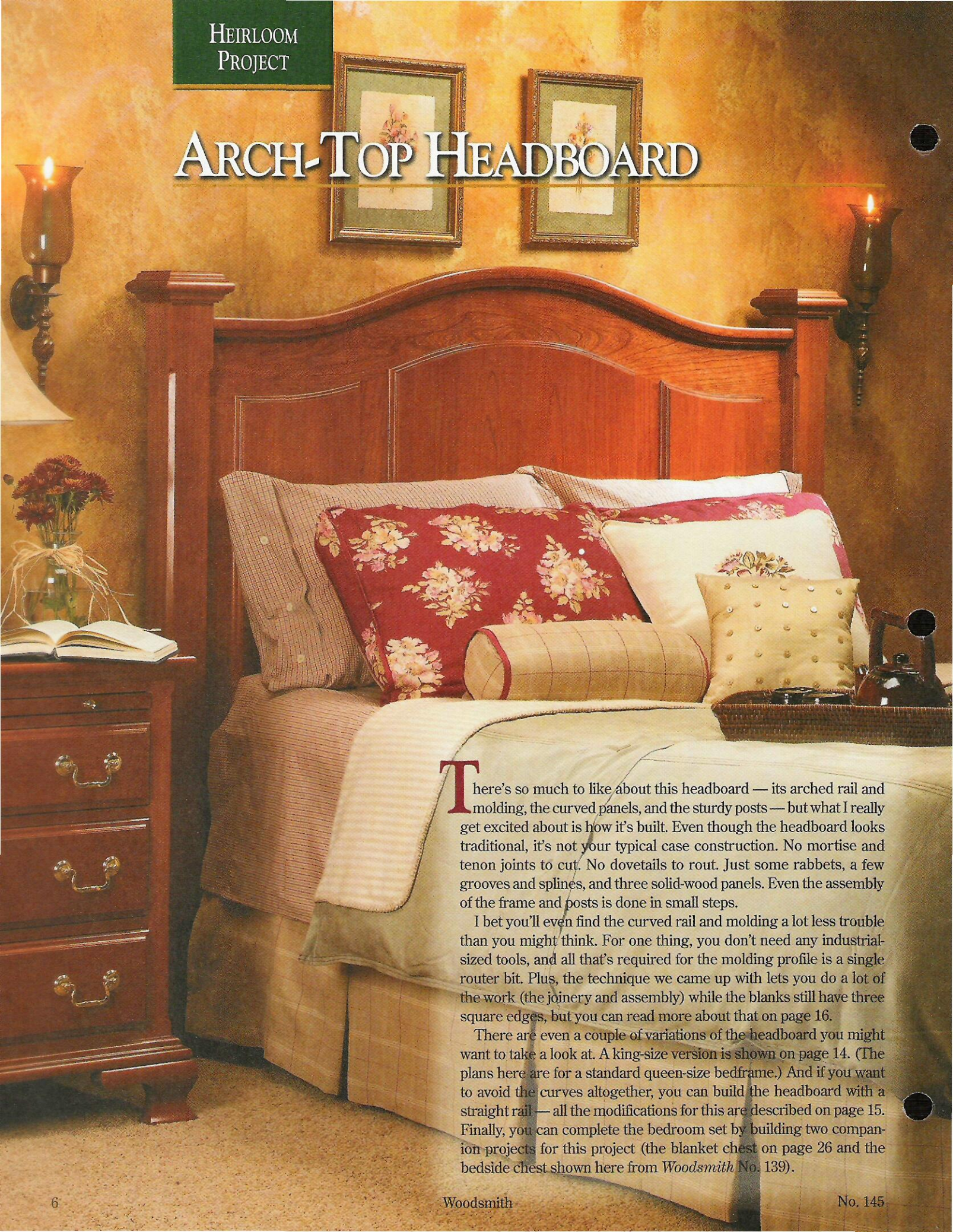

There's so much to like about this headboard — its arched rail and molding, the curved panels, and the sturdy posts — but what I really get excited about is how it's built. Even though the headboard looks traditional, it's not your typical case construction. No mortise and tenon joints to cut. No dovetails to rout. Just some rabbets, a few grooves and splines, and three solid-wood panels. Even the assembly of the frame and posts is done in small steps.

I bet you'll even find the curved rail and molding a lot less trouble than you might think. For one thing, you don't need any industrial-sized tools, and all that's required for the molding profile is a single router bit. Plus, the technique we came up with lets you do a lot of the work (the joinery and assembly) while the blanks still have three square edges, but you can read more about that on page 16.

There are even a couple of variations of the headboard you might want to take a look at. A king-size version is shown on page 14. (The plans here are for a standard queen-size bedframe.) And if you want to avoid the curves altogether, you can build the headboard with a straight rail — all the modifications for this are described on page 15. Finally, you can complete the bedroom set by building two companion projects for this project (the blanket chest on page 26 and the bedside chest shown here from *Woodsmith* No. 139).

Construction Details

OVERALL DIMENSIONS:
65⅛"W x 57"H x 5⅝"D

Groove cut full length of posts, then plugged with filler strips

Upper rail and molding start out as oversized blanks

#8 x 2½" Fh woodscrew

OGEE TRIM PLATE

BACK PANEL (¼" ply.)

BULLNOSE TRIM PLATE

Posts joined with rabbets

Splines join posts to frame

Panels screwed to splines in frame

Panels are glued up from ¾"-thick stock and are cut ½" larger than frame opening

OUTER PANEL

POST SIDE

INNER STILE

Post assembly

BOTTOM RAIL

POST FACE

Rails and stiles joined with short splines

SPLINE

Chamfer "hides" joint line

NOTE: For king-size headboard dimensions, see page 14

Posts made up of ¾"-thick faces and 1"-thick sides

NOTE: To see how headboard is attached to bedframe, turn to page 14

NOTE: Materials and supplies are listed on page 14

SIDE SECTION VIEW

Ogee plate caps top

Bullnose and ogee plates are mirrored on bottom

#8 x 2½" Fh woodscrew

MOLDING (¼" ogee fillet profile)

TOP RAIL

NOTE: For more on making arched molding, see page 16

BACK PANEL

OUTER PANEL

Woodsmith GO ON-LINE EXTRAS — To purchase a tiled, full-sized half-pattern for this headboard go to: www.woodsmith.com.

QUEEN-SIZED HALF PATTERN

28"

6"

One square = 1"

NOTE: For step-by-step instructions for drawing full-sized half-pattern, see page 23

▲ *The bed posts aren't solid. They're glued up from four pieces that are joined with rabbets.*

Posts

At each end of the headboard, there are sturdy 3½"-square posts that will support the frame and panels. Instead of gluing up thick stock to create solid posts that would be heavy and have a lot of joint lines, I assembled each post from four pieces, as shown in the photo at left and in Fig. 1.

POST FACES & SIDES. What's a bit unusual about these posts is that the pieces are not all the same thickness, as you can see in Figs. 1 and 1a. The four *post faces (A)* in front and back are cut oversized in length *and* width from ¾"-thick stock. But for the *post sides (B)*, I used 5/4 stock so ½"-deep grooves could be cut for some splines that will be used to connect the frame later. (The four side pieces can be cut to final width and rough length.)

Design Note: You will need quite a bit of 5/4 stock for this project, and while it can often be milled to 1$\frac{1}{16}$" thick, I planed my stock down to an even 1" thick to remove any cupping and clean up the faces. You can leave your 5/4 pieces thicker, but the dimensions for the posts here are based on 1"-thick stock.

To "wrap around" the sides, the face pieces need ⅜"-deep rabbets cut along each edge (Fig. 1a). But I was concerned that the face pieces might tip as these wide rabbets were being cut. So instead, I actually cut two *grooves*, as shown in Fig. 2. (This will work because the faces start out extra wide.) Then I flipped the faces over and trimmed enough off each edge so the rabbets matched the thickness of the sides (1"), as you can see in Fig. 2b.

Next, the grooves for the splines can be cut on *one* of the side pieces of each post, as in Fig. 1a. To do this, it's easiest to use the table saw, and by flipping the piece end for end between passes, these grooves will be centered automatically.

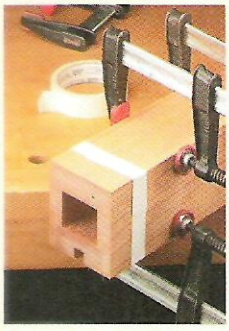

▲ *Long posts require a lot of clamps, but you can work around this. Once a section is pulled tight, you can secure it with tape and then reposition the clamp.*

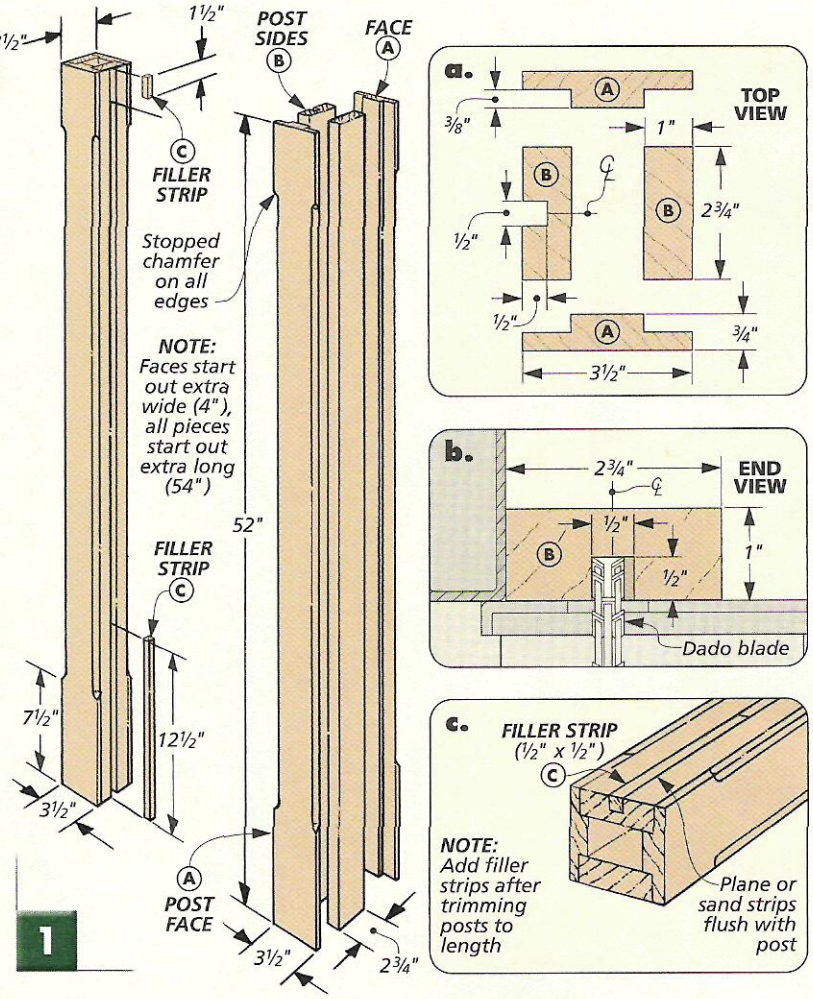

ASSEMBLY. At this point, the posts are ready to be glued together. Of course, with pieces that are nearly five feet long, it would take a whole lot of clamps to pull the rabbets tight along the entire length of the posts. But I did two things to get around this problem. First, I only glued the two faces to one side piece at a time. That way, instead of trying to make sure all four joint lines were tight, I only had to concentrate on two. (The other side piece was used as a spacer to keep everything square.)

The other thing I did was to use tape to help spot clamp the posts. Wherever you find a gap, simply close it up with one of the clamps, then wrap it tight with some tape, as shown in the margin photo at left. (I like to use masking or packing tape for this.) The tape is plenty strong to hold the pieces together after they've been pulled tight by the clamp, and with the tape in place, you can reposition the clamp to close up another gap.

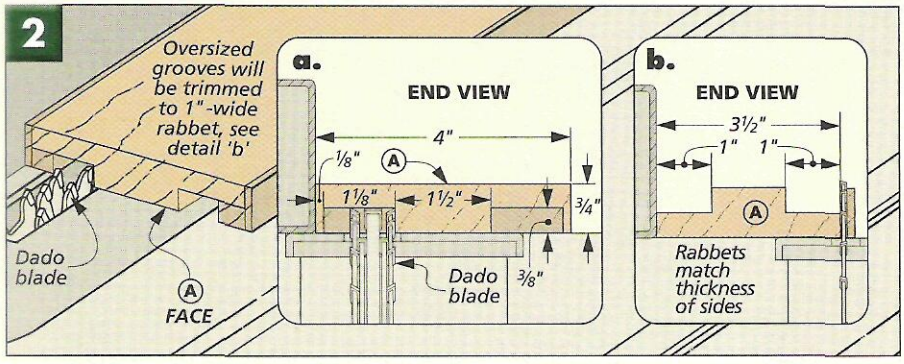

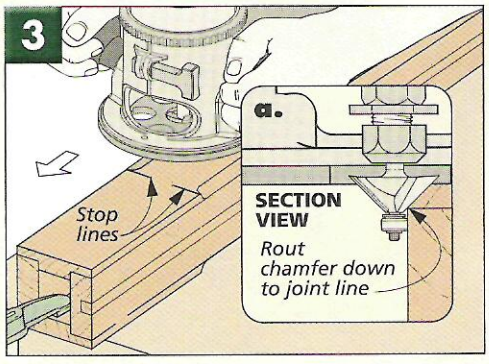

FINAL LENGTH. Once the two posts are assembled, they can be cut to final length. If you have a miter saw, this shouldn't be much of a problem, though with some smaller saws you may have to cut the posts in two steps, rotating them between passes.

If you have to rely on your table saw, crosscutting the long posts is a bit trickier. You will need to attach a long auxiliary fence to the miter gauge and add a stop block. And the crosscut will definitely have to be made in two passes.

With the posts cut to length, there are just two details to work on before you can work on the trim plates that cap the posts.

First, to fill in the grooves at the top and bottom of the posts, I added *filler strips (C)*, as you can see in Fig. 1. I like to start with the strips a hair proud so they can be sanded perfectly flush, as in Fig. 1c. (This would be nearly impossible to do if you waited to fill the grooves until after the headboard is assembled.)

Finally, you can rout a stopped chamfer on each edge of the posts, as shown in Fig. 3. To do this, I drew stop lines and routed up to the lines. Then to even out the ends of the chamfers, I did a little sanding, but more on that on page 23.

TRIM PLATES. The top and bottom of the posts are capped with several layers of trim plates, as you can see in Fig. 4. Each plate is cut from ¾"-thick stock and has a routed profile.

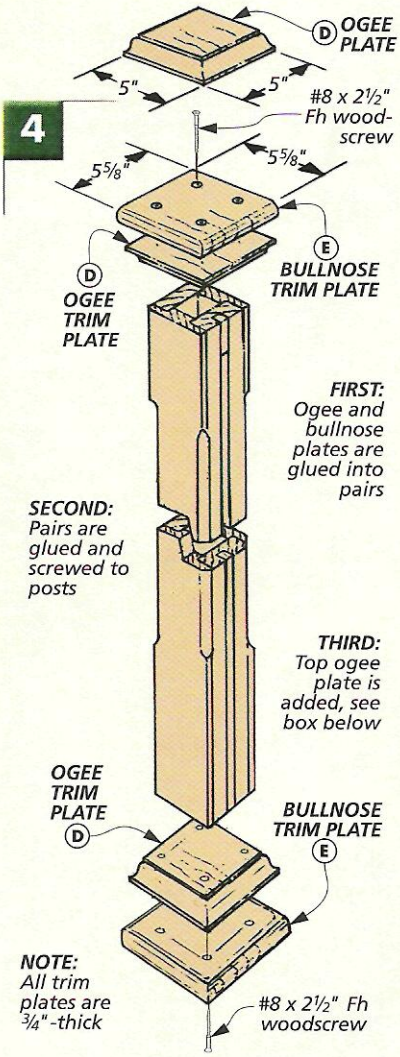

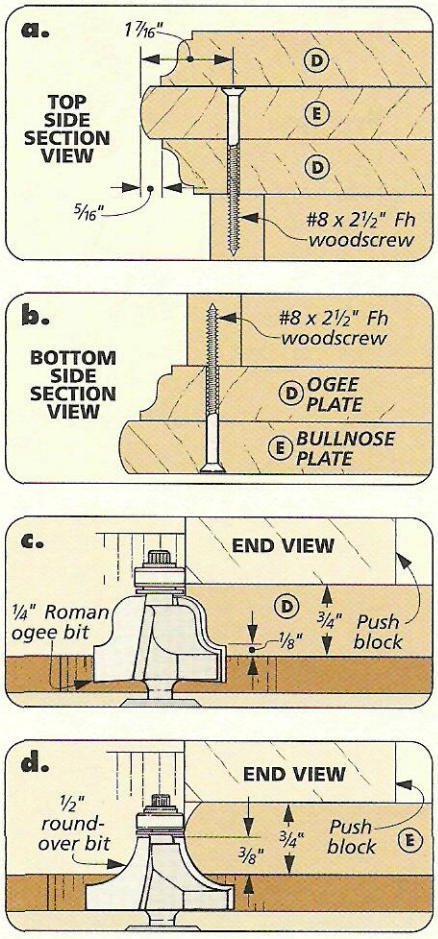

First, six *ogee trim plates (D)* are cut 5" square (three for each post). The only thing you'll need to do with these is rout a Roman ogee profile on the edges, as indicated in Fig. 4c.

Routing a profile like this across end grain tends to create some chipout. So I rout the ends first, using the fence and a push block to guide the workpiece. That way, when the edges are routed, any chipout will be cleaned up by the bit.

The second plates to make are the *bullnose trim plates (E)*. You'll only need two of these for each post, and they're slightly larger (5⅝") than the other plates. To rout this profile, I used a ½" round-over bit and raised it ⅜" above the table, as you can see in Fig. 4d.

When all the plates have been routed and sanded smooth, you can begin to attach them to the post. Start by gluing up four pairs, centering one ogee plate on each bullnose plate. Then screw these pairs to the ends of the posts.

At this point, you should still have two ogee plates left over. These will go on top of the posts to cover up the screws in the bullnose trim plates. But the trouble is keeping each plate centered *and* clamping it to the top of a post that's nearly five feet tall. To see a couple of tricks for getting around these problems, check out the box at left.

TWO QUICK ASSEMBLY TIPS

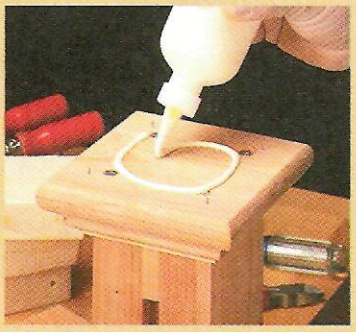

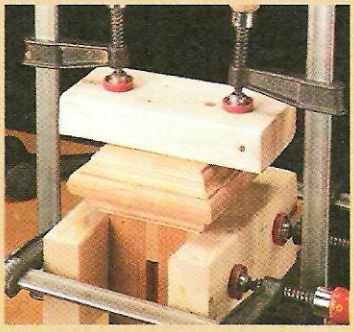

When adding the last plate to each post, I used two common tricks. First, to keep the piece from sliding around on the glue, I added brads with their heads snipped off (left photo). Then to clamp the plate in place, I clamped temporary cleats across the post (right photo).

▲ *To hold this headboard together, matching grooves are cut on each piece. Then they're connected with loose splines.*

Frame

With the posts complete, you're ready to work on the frame, as shown in Fig. 5. Here, the top rail with its arched molding is pretty impressive, but don't overlook the frame itself. As you can see in the photo, all the rails, stiles, and posts have been assembled with grooves and loose splines. A slot cutter bit is all that's needed for this construction, which means you don't have to wrestle with large pieces at your drill press (to drill mortises) or your table saw (to cut tenons). All in all, it's a pretty easy way to create a large frame, even if the joinery isn't exactly traditional.

TOP RAIL. The first part of the frame to work on is the arched *top rail (F)*, as in Fig. 5. To cut the curve in this piece, you'll need to start out with a 5/4 blank that's 12" wide. (If you need to glue up two pieces to get this width, you'll want to match the grain as closely as possible so the joint line doesn't stand out.)

While cutting the top rail to rough width and final length, you might as well cut the *bottom rail (G)* to size at the same time. (It's the same length.) Then you can set this rail aside while you work on the curves and add the molding to the top rail.

CUTTING CURVES. The curved shape of the top rail and molding isn't all that difficult to create. The first thing you'll need is a full-sized half-pattern (page 7). You can either draw one yourself, as I did on page 23, or you can purchase one from the Online Extras section on our web site. I formed the curve on the bottom edge of the rail, using a band saw, drum sander, and a file, as described in the box on page 16.

Once you've cut the lower curve on the rail, the next step is to rout grooves for the splines that hold the frame together. I did this with a slot cutter bit in a hand-held router, as in Fig. 6. This way, the base of the router will follow the board even if there's some bowing, so the groove ends up a consistent width.

As you're routing the grooves, there are three things to remember. First, the grooves on the rail's ends are stopped so the splines won't end up visible on top of the rail.

Second, the width of the grooves should match the grooves on the posts. To help with this, I made a test spline that fit the post grooves.

The last thing to note is that these grooves are centered on the edge of the rail. I did this like I would a

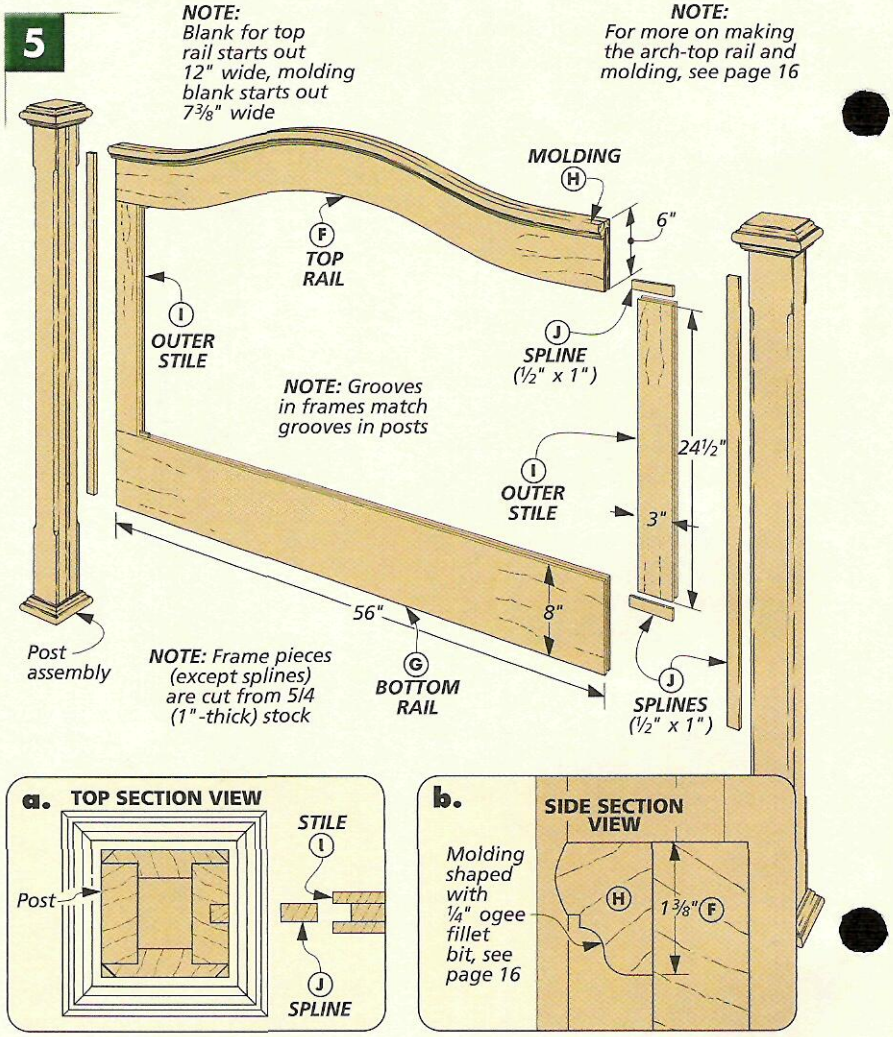

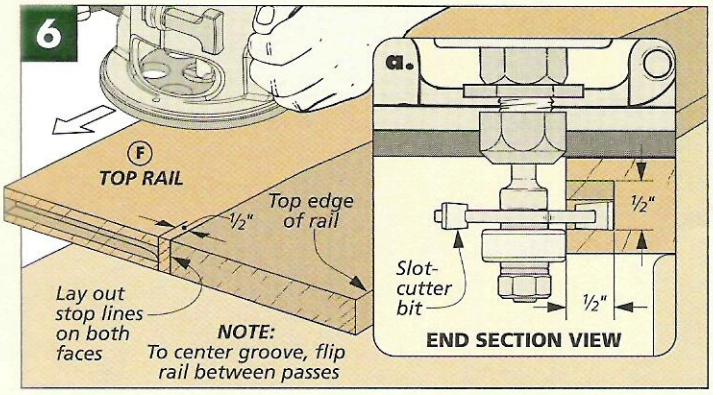

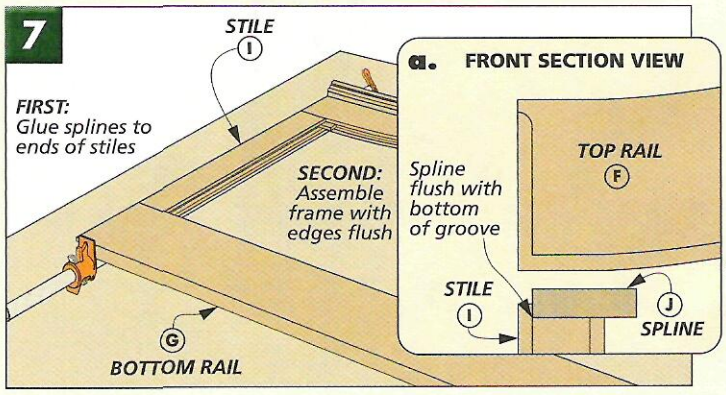

groove on the table saw, by flipping the piece over between passes. Just sneak up on the size of the grooves until they match the test spline.

CURVED MOLDING. After routing the grooves, you can add the blank for the curved *molding (H)*, as in Figs. 5 and 5b. But all this is described in detail in the article on page 16.

STILES. With the top rail and molding complete, you can cut the *outer stiles (I)* to size, as in Fig. 5. The only thing to do here is rout grooves on all four edges. (These are identical to those on the rail and posts.) Then you can rout the same groove on the upper edge of the bottom rail.

The last step before assembly is to make the *splines (J)* that connect the pieces. The stock here is planed to fit the grooves and then ripped into 1"-wide strips. You'll need quite a few linear feet of splines, and you may as well cut it all at once, refer to the Materials List on page 14.

ASSEMBLY. At this point, you can assemble the frame, as shown in Fig. 7. To do this, I glued the splines to the ends of the stiles first (Fig. 7a). But note the splines are set in ½" from the outside edge so there's room later for the splines that connect the posts. Next you can clamp the stiles between the rails and make sure their edges and ends are flush and the frame is square.

INNER STILES. The next pieces to add are the *inner stiles (K)*, as shown in Fig. 8. They start out cut to rough length so you can shape the top end to match the curve on the top rail.

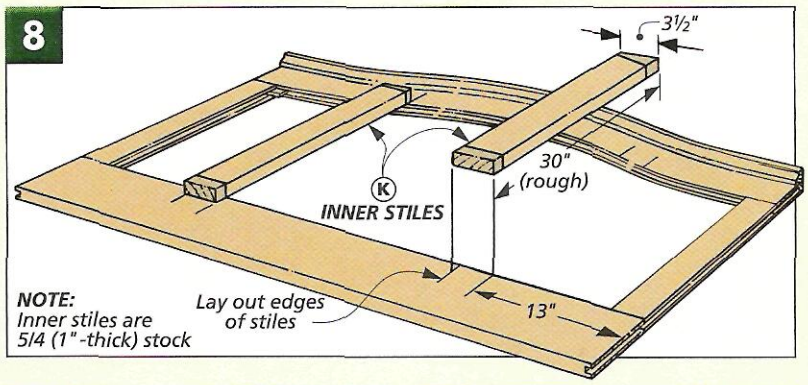

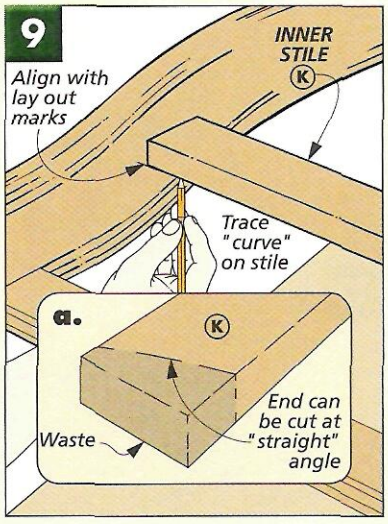

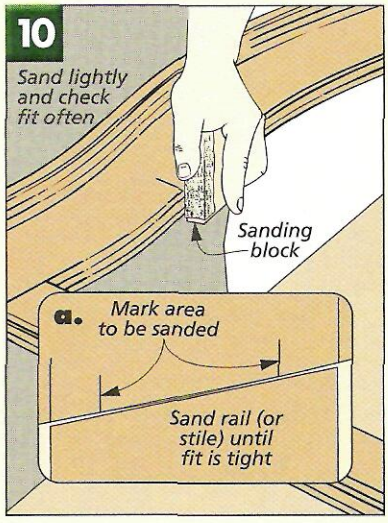

To position the stile, I measured in 13" from the outside of the frame, as in Fig. 8. Then I set the stile in place and marked its position on the rails (Fig. 9). Now the edge of the rail can be traced on the stile. There isn't much of a curve here. In fact, I found it easiest to make an angled crosscut on the end of the stile and then sand the top rail to match it, as in Fig. 10. An easy way to help you see where to sand is to set the stile in place and mark the points where the rail touches, as in Fig. 10a.

Be sure to sand lightly, checking the fit often. When these pieces fit tight, you can trim the square end of each stile to final length and rout the grooves on all four edges.

To attach the inner stiles to the frame, I glued short splines to the top and bottom rails, as you can see in Fig. 11. Then I applied glue to the splines and slid the stiles in place from the center out. You won't need to use clamps because the stiles wedge themselves in place.

Finally, I added the posts to the frame, as shown in Fig. 11. The problem here is that there's nothing to align these pieces — and they are heavy. So to align the grooves in the frame and posts, I raised the frame with some scrap blocks, as in Fig. 11a. And I added 1" spacers at the top of the posts and pulled the frame up tight against them.

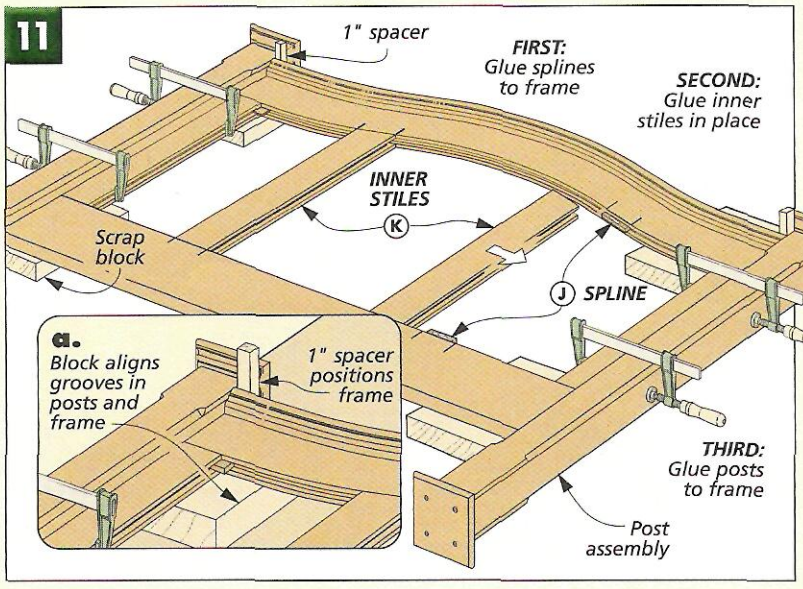

Panels

Now that the frame has been assembled, basically all that's left is to add the three curved panels. As you can see in the photo here, the panels don't fit into grooves — they overlap the frame opening, with ordinary rabbets to help position them. To keep the panels in place, they're simply screwed through some splines, as you can see in Fig. 16a on page 13.

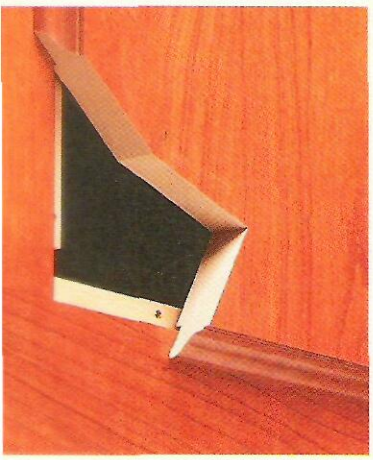

▲ *Unlike traditional raised panels, the panels here don't fit into grooves in the frame. Intead the panels lay on "top" of the frame and are screwed to the splines.*

GLUE UP PANELS. The first thing to do is glue up three wide panels from ¾"-thick stock, as shown in Fig. 12. The panels are going to get a lot of attention, so be sure to pay close attention to the grain pattern and color of the boards you're putting together. You want each panel to end up looking like a single, wide board.

These panels should end up large enough so they can be sized to overhang the frame ½" on each edge. The *center panel (L)* I started out with was over 24" wide and about 31" tall (long). The two *outer panels (M)* were over 11" wide and about 28" tall. (The exact length will depend on the curve of the top rail.)

Ripping the panels to final width is no problem. As for their length (height), at this point all you need to do is square up the bottom end. It was a bit of a stretch, but I was able to do this at my table saw. (You could also use a straightedge guide with a circular saw or with a handheld router and a straight bit.)

Once each panel has been trimmed on three edges, it's time to lay out the top curves. Instead of trying to use the half pattern, I set the panels on the frame and drew the curve off the molding on the rail, as you can see in Fig. 13. First, four spacers were used to position the panels side-to-side. Then the bottom edges of the panels were lined up ½" below the frame openings.

Now you can use a compass to trace the shape of the curve. I set the point of the compass against the square shoulder of the molding, as in Fig. 13. The important thing here is to make sure the line ends up ½" above the frame opening.

With the top edges of the panels drawn, they can be cut and sanded smooth. By now, you've shaped these curves enough times that you could almost do it blindfolded. And

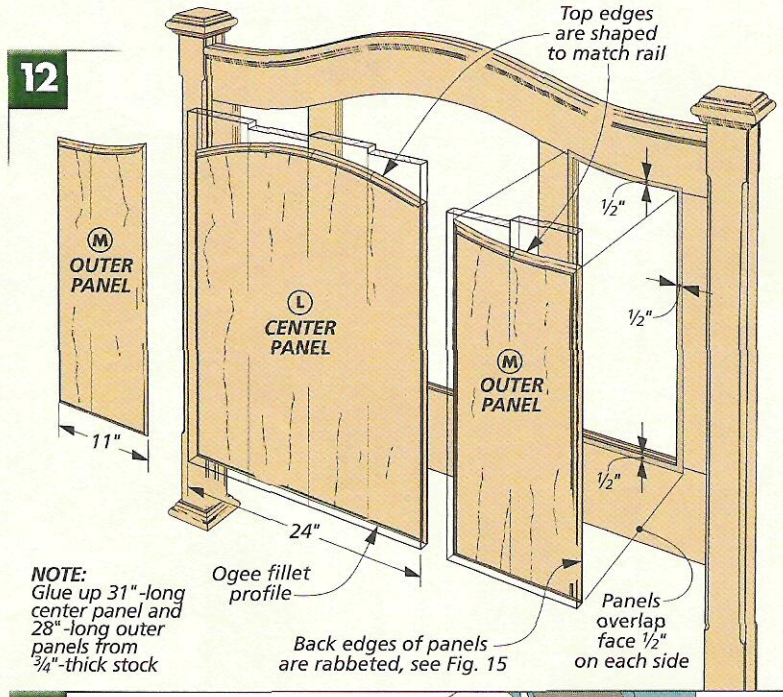

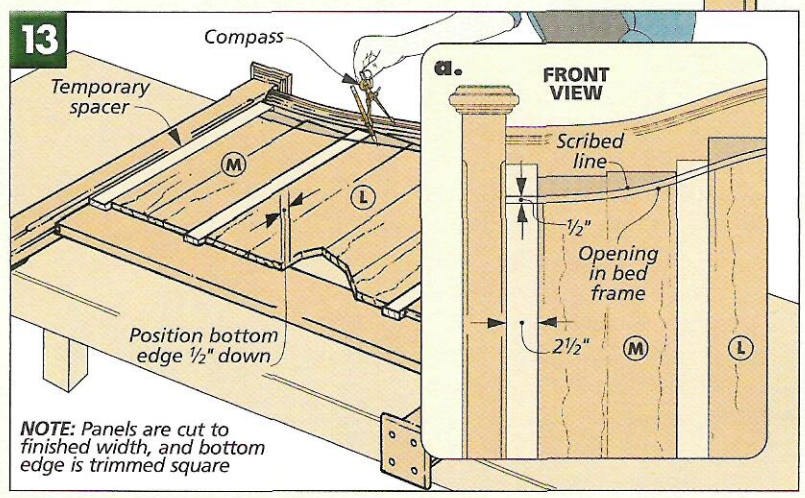

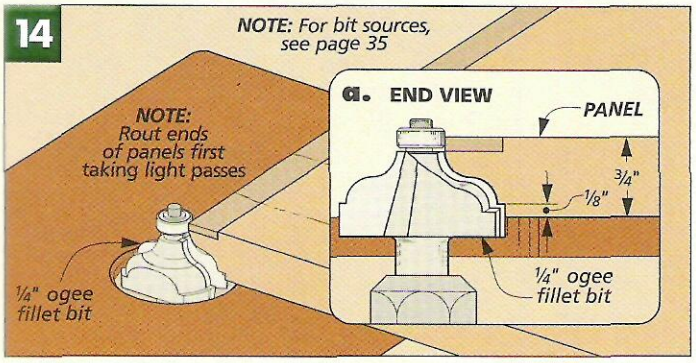

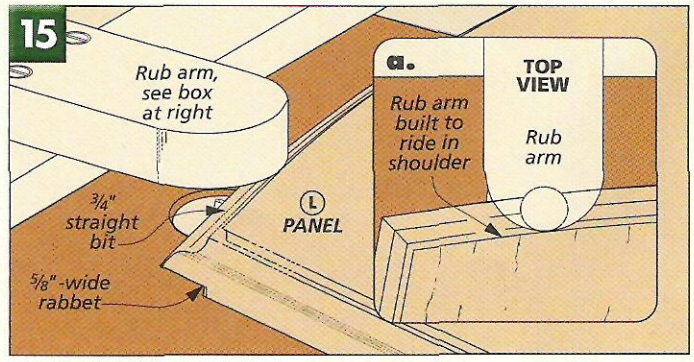

there's no difference to the technique here except that the panels are wider (and shorter).

ROUT EDGES. With curves on the top of the panels cut, all that's left is to shape their edges. You'll need two router bits for this. The 1/4" ogee fillet bit that you used on the molding earlier and a 3/4" straight bit.

OGEE FILLET. First, I routed the ogee fillet profile on all the panels. As you can see in Fig. 14, I did this using the bearing of the bit to guide the panel. That's because you can't run the curved edges of the panels against the fence. And, you'll want to rout this profile in several light passes, sneaking up on the final height of the bit. Also, it's best to start with the ends of the panels.

RABBET. The last thing to do is rout a shallow rabbet on the back side of each panel. These 1/8"-deep rabbets allow the panels to set into their frame openings, and they're all 5/8"-wide so there's a 1/8" gap for the panels to expand freely (Fig. 16a).

This is all pretty straightforward, but the trick with these rabbets is you can't use your router fence — at least not on the curved top edges. So to get around this, I used a straight bit with a rub arm, as shown in Fig. 15 and the box below. The important thing is that the rub arm fits into the fillet (the square shoulder) that's part of the profile, as in the drawing in the box below.

FINISH PANELS & FRAME. Before the panels can be mounted to the frame, there are still a couple things to do.

First, you need to glue some more splines (J) into the grooves in the frame openings, as you can see in Fig. 16. And when drilling the shank holes for the screws, you'll want them oversized so the panels can expand and contract freely.

Second, I applied finish to both the panels and the frame. (I used the same finish that's on the blanket chest, refer to page 34.) By finishing the panels and frame separately, there won't be any unfinished edges of the frame that could get exposed as the panels shrink later on.

When finishing the panels, it's important to finish both faces. Even though the back face will be covered later (see page 14), the panels will be less likely to warp if there's a coat of finish on both faces.

INSTALL PANELS. When the finish has dried, I screwed the panels to the splines with roundhead screws, as in Fig. 16. To make it easy to position these panels from the back, I set them on 1/8"-thick spacers, as shown in Fig. 16b. It also helps to draw centerlines on the back of each panel and frame opening so you can line everything up easily.

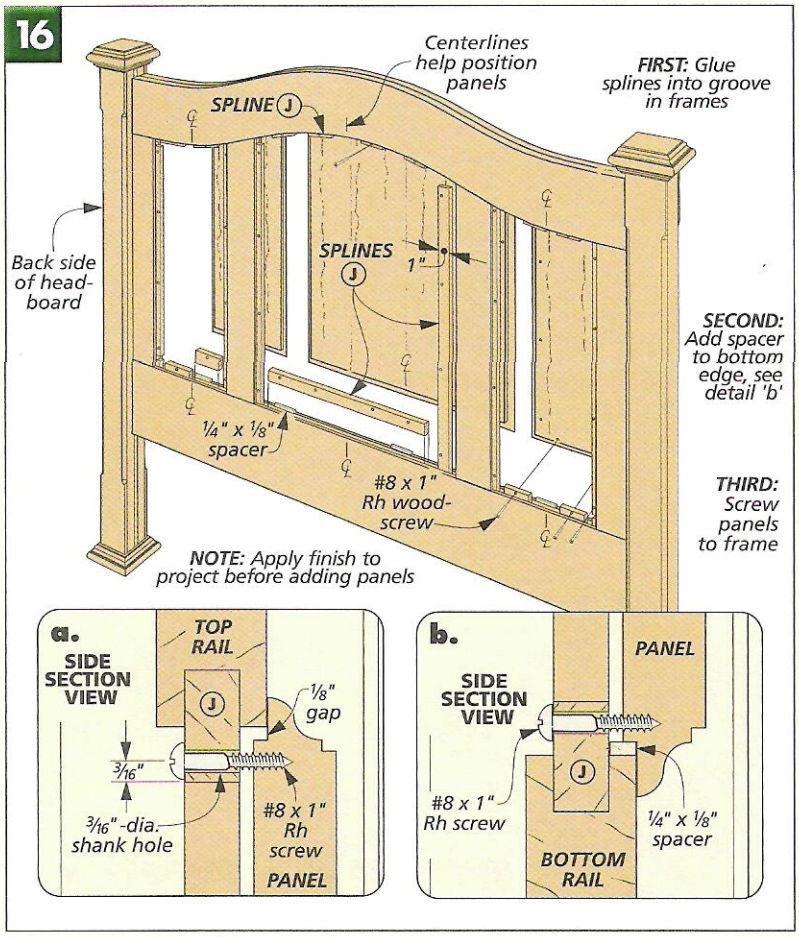

ROUTER TABLE RUB ARM

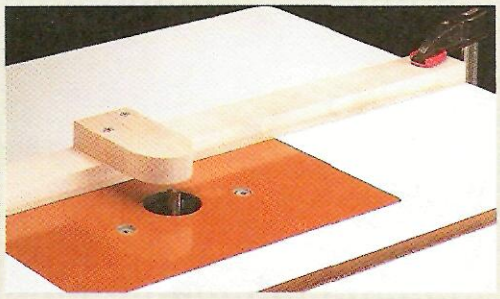

When you need to rout along a curved edge and can't use the bearing on the bit to guide the piece, you can build a quick rub arm, like the one shown here. Its rounded arm will guide straight and curved edges consistently. For the panels here, I sized the fence so the rub arm fits into the shoulder of the profile.

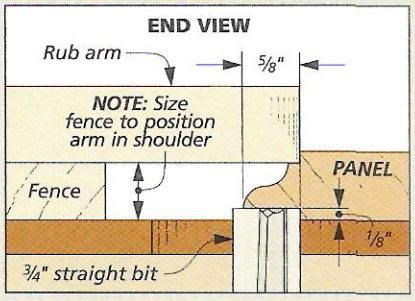

Back

At this point, the headboard is essentially complete. But there are still a couple odds and ends to wrap up.

BACK. To cover the frame openings in back, I added a 1/4" plywood *back panel (N)*, as in Fig. 17. Like the frames earlier, it's sized to overhang the openings 1/2" on each side. And to create the curve on top, I used the half-pattern that was used to draw the curve on the top rail earlier.

MOUNT TO BEDFRAME. Once the panel is screwed to the frame, all that's left is to mount the headboard to a metal bedframe. As you can see in Fig. 17b, I did this with threaded inserts, hex head screws, and washers. Have someone hold the headboard up and set the end of the frame against it so you can mark the position of the mounting slots on the posts. Then you can lay the headboard down and install the inserts. (I added two to each side.) W

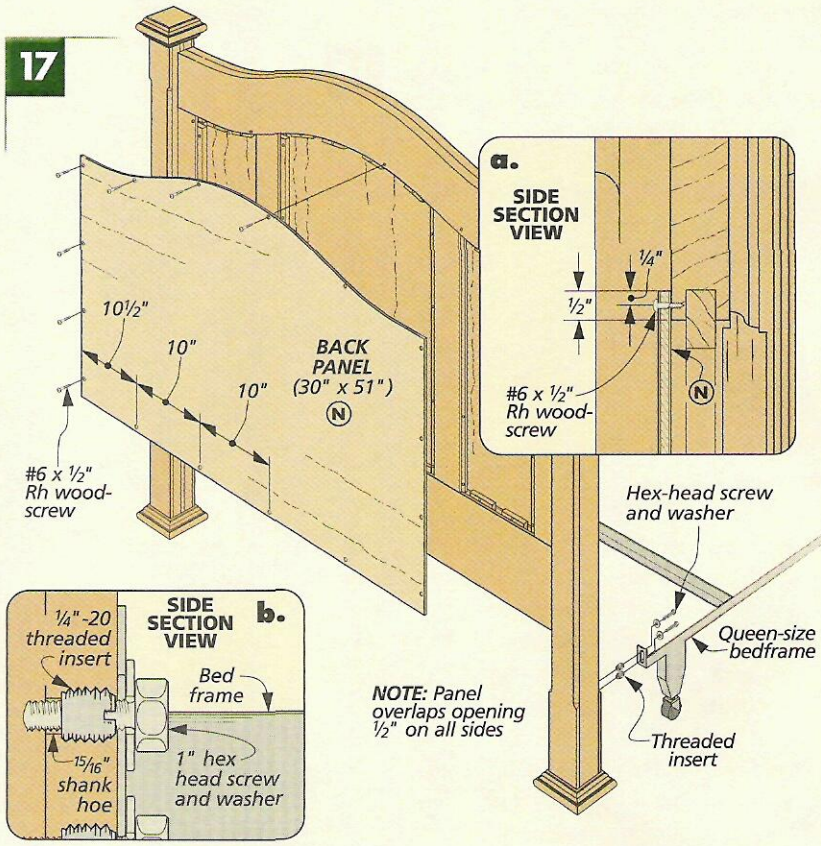

Woodsmith GO ON-LINE EXTRAS

To download a free Cutting Diagram for the queen-size headboard, go to: Woodsmith.com

MATERIALS & SUPPLIES

A	Post Faces (4)	3/4 x 3 1/2 - 54 rgh.	H	Molding (1)	1 x 7 3/8 rgh. - 56
B	Post Sides (4)	1 x 2 3/4 - 54 rgh.	I	Outer Stiles (2)	1 x 3 - 24 1/2
C	Filler Strips	1/2 x 1/2 - 32 rgh.	J	Splines	1/2 x 1 - 32 ln. ft.
D	Ogee Trim Plates (6)	3/4 x 5 - 5	K	Inner Stiles (2)	1 x 3 1/2 - 30 rgh.
E	Bullnose Trim Plates (4)	3/4 x 5 5/8 - 5 5/8	L	Center Panel (1)	3/4 x 24 - 31 rgh.
F	Top Rail (1)	1 x 12 rgh. - 56	M	Outer Panels (2)	3/4 x 11 - 28 rgh.
G	Bottom Rail (1)	1 x 8 - 56	N	Back Panel (1)	1/4 ply. - 30 x 51

- (16) #8 x 2 1/2" Fh Woodscrews
- (40) #8 x 1" Rh Woodscrews
- (16) #6 x 1/2" Rh Woodscrews
- (4) 1/4"-20 Threaded Inserts
- (4) 1/4"-20 x 1" Hex Head Screws
- (4) 1/4" Washers

KING-SIZE HEADBOARD

To modify this headboard for a king-size bed, I "stretched" the design so it's wider (and the curve slightly taller) than the queen-size version. But before you start, it's a good idea to measure your bedframe to make sure it will line up with the posts.

The procedure here will be the same as before, but a few dimensions have changed. The blanks for the top and bottom rails (and molding) start out the same width, but now they're 68" long. The curve is slightly different too. (The half-pattern is provided below.) As for the panels, only the center panel is wider. The two outer panels are the same as on the queen-size bed.

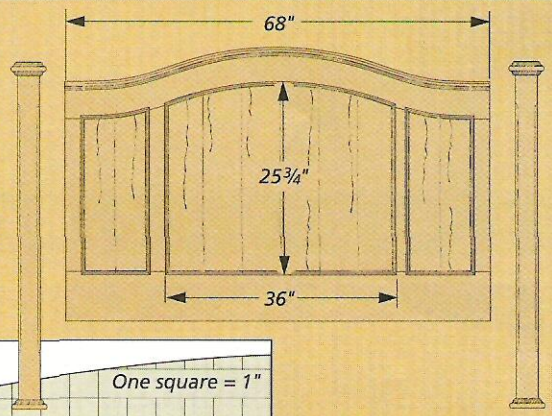

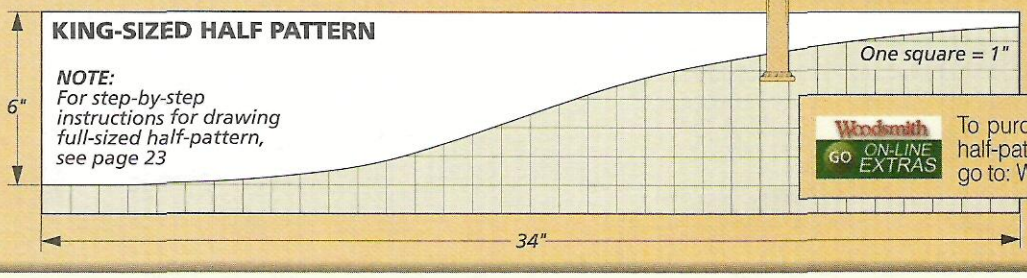

Woodsmith GO ON-LINE EXTRAS

To purchase a tiled, full-sized half-pattern for this headboard go to: Woodsmith.com.

STRAIGHT-TOP HEADBOARD

As elegant as the arched molding looks on the headboard, removing the curves from the top rail and molding really makes the construction straightforward.

Redesigning the headboard with a straight top rail and molding didn't take a lot of work. However, when you start to build the headboard without the curves, you realize just how much this design modification simplifies the procedure.

Actually, the overall procedure doesn't really change that much. You still start out by building the two posts, and they're sized exactly the same as before (refer to page 8).

With the posts built, the first thing to do on the frame is cut the rails to size, as shown in Fig. 1. The *bottom rail (G)* doesn't change at all, but the *top rail (F)* certainly does. I still cut it oversized so the top edge could be cleaned up after the molding was added later. But for the straight-top version, the rail only needs to be 6¼"-wide to start off with. (It'll end up 6" wide.) And of course, there's no curve to lay out and cut along the bottom edge.

As for the molding, I still started out with a fairly wide blank (about 6"). This way, after safely routing the ogee fillet profile on one edge, I could rip it 1⅝" wide and still use the cut off piece to make the stiles.

Now the top rail and molding can be glued together. (If you don't have enough clamps, you could make both blanks a bit wider and then screw them together through the waste section.) And when the glue is dry, this rail assembly can be ripped to final width (6").

To complete the frame, all that's left is to add the outer (I) and inner stiles (K). But as you can see in Fig. 1, the stiles can all be cut to the same length. (They're still different widths, as before.) This means there's no custom fitting that needs to be done to the inner stiles. Then when assembling the frame, you can work with all the rails and stiles at one time or glue it up in two stages.

With the frame glued up and the posts added, you're ready to work on the panels. You still have wide panels to glue up, but with a straight top rail, cutting the panels to finished size can be done much more quickly. Again, there aren't any curves, and all three panels are the same height (length).

Even the ¼" plywood back is more straightforward. It's simply cut to overlap the frame opening and screwed in place.

As you can see, this headboard is a bit easier to build than the curved one — and it's still an impressive project.

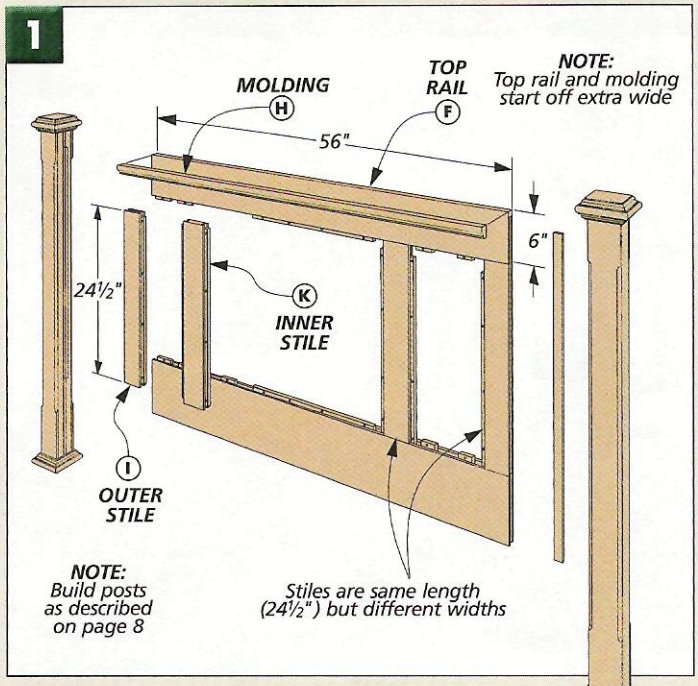

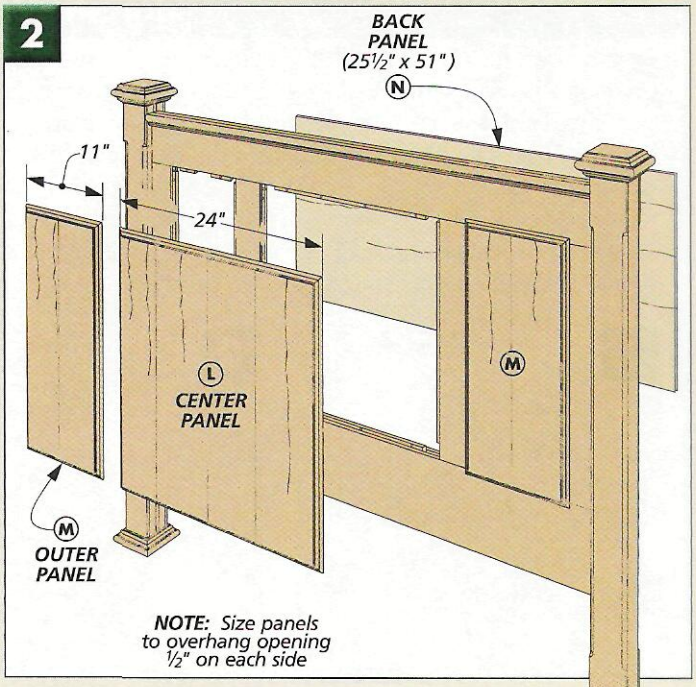

ARCHED MOLDING

If "straight and square" has become routine, here's a new twist: Build a curved rail — and add some matching arched molding.

Most of the time, the "goal" in woodworking is to build a project as straight and square as possible. So it's a nice change of pace when you're able to build a project that has curves as part of its design. Arched molding (like the molding on the headboard and the bookends in this issue) is one use of curves that's certainly eye-catching — and it's not as difficult to achieve as you might think.

Even though the final results look different, the arched molding procedures for the headboard and bookends are similar. To show you how to make arched molding here, I'll walk you through the process used for the top rail on the headboard. To see how it's applied to the bookends, refer to page 20. Between the two projects, you'll find all the techniques you need for applying arched molding to your own projects.

OVERSIZED BLANK. The place to start is with the "base" piece the molding will be glued to. It may be a rail, as on the headboard, or a body, as on the bookends. This piece should start out oversized in either width or length, and if there's any joinery that needs to be cut, it should be done *before* the molding is added.

For the headboard, I started with the top rail blank, as in Fig. 1 at right. It was cut to final length but was left extra wide (12"). And before the joinery could be cut, I had to create the curve on its bottom edge.

To create the large curve on this rail, you'll need a half pattern. It's not hard to draw this curve yourself (refer to page 23), but you can also purchase a full-size half pattern on our web site (see the box on page 7).

I like to draw both the upper and lower curves on the blank, but for now, just the bottom curve is cut out. To do this, I used a band saw, a

SHAPING A LONG CURVE

Creating a long curve doesn't take any special skills, but there are some tricks for getting it smooth and even.

After you have drawn the curve on the blank, the first step is to rough out this long curve with the band saw, as in Fig. 1 below. The trick here is to keep the blade just on the waste side of the line and still keep the workpiece moving steadily so the cut ends up as smooth as possible.

I tackle the cleanup in several steps. First, I quickly remove the saw marks at the drum sander, as in Fig. 2.

Next, you want to smooth out any inconsistencies in the curve with a cabinet file, as you can see in Fig. 3. Its width allows it to hit the high spots and "jump" across the depressions, gradually evening out the curve. Finally, I go back to the drum sander to smooth the marks left by the file.

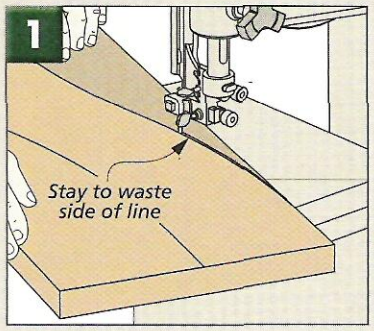

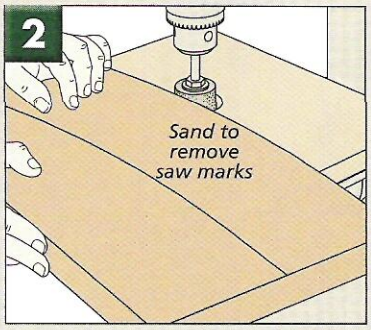

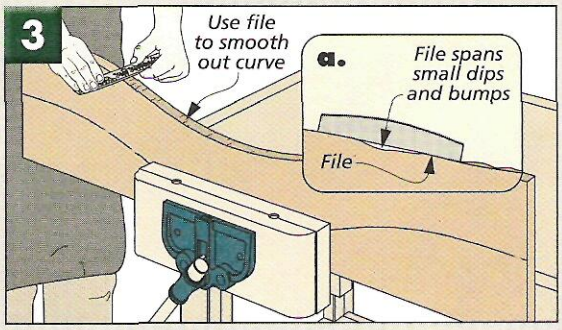

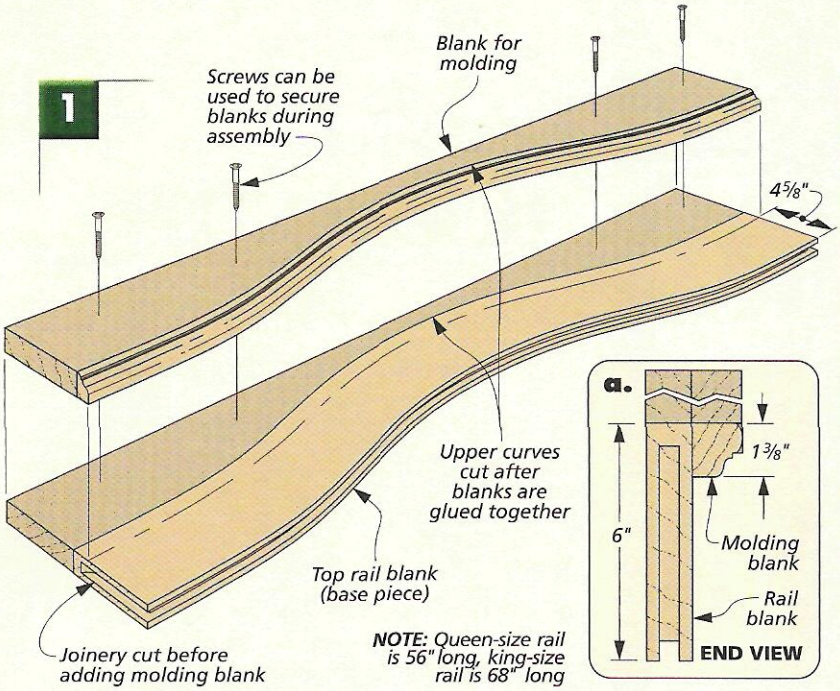

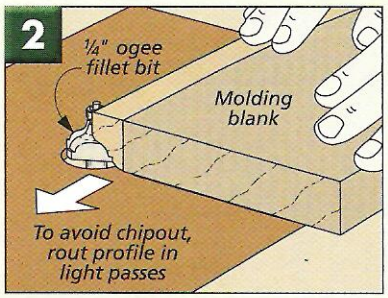

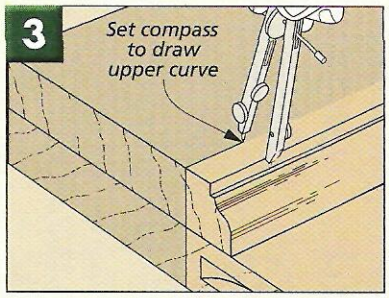

drum sander, and a file. And since you'll be creating this curve quite a few times in building the arched molding, it's covered in more detail in the box on the opposite page.

Once the curve was sanded, you can cut the joinery on the top rail blank. Here, this was just a matter of routing grooves with a hand-held router, refer to Fig. 6 on page 10.

MOLDING BLANK. With the joinery cut on the top rail blank, it can be set aside while you work on the molding, as in Fig. 1. Like the rail, the molding starts out as an extra-wide blank (7⅜"). This makes it easier and safer to work with. Plus, if you size the molding blank carefully, the top (straight) edges of the two blanks will line up later when it's time to glue them together.

There are just two things to do to the molding before it's ready to be glued to the rail blank. First, the lower curve of the molding is cut to shape. (If the base workpiece *isn't* curved, like the body on the bookends, then you'll need to make a template or pattern now.) The second thing to do is rout the profile on the curved edge of the molding.

For the headboard, the molding blank starts out 7⅜" wide. Its curve is laid out and cut on the bottom edge, just like the top rail blank, as in Fig. 1 and the box at left.

To create the profile on the edge of the molding, it's routed from right to left at the router table, as in Fig. 2. (You'll have to use the bearing to guide the blank.) Chipout is the big concern at this point, so to prevent it, I routed the profile in shallow passes, raising the bit each time.

ASSEMBLY. Now the molding blank can be glued to the base blank. The important thing is to make sure the curved edge of the molding ends up the right distance up from the bottom (curved) edge of the base blank (in case the top, square edges don't line up). With large pieces, you can use screws in the waste sections to "clamp" the pieces together. Just try to avoid getting excess glue along the curve of the molding. It would be difficult to clean up.

FINAL SHAPING. The last step is to shape the upper edge of the assembly. To match this curve to the lower edge of the molding, I used a compass, as in Fig. 3. Then the curve can be cut as described earlier. Once the curve is sanded smooth, the molding blank is usually done.

For the headboard, however, you'll also need to add a bullnose profile to the front of the molding. This has to be done by hand. First I drew some guide lines, as shown in Fig. 4. Then the bullnose can be created by filing away at the corners, as you can see in Fig. 5. (It's a good idea to protect the routed profile with a layer or two of masking tape.)

With a little sanding, the arched molding is complete. Then you can step back and admire your work. W

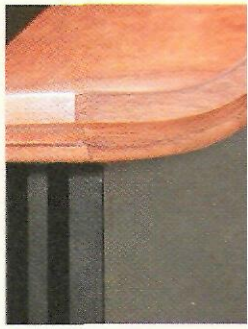

▲ *The curved molding on the top of the bookends wraps around three sides of the body. To see how this is done, turn to page 20.*

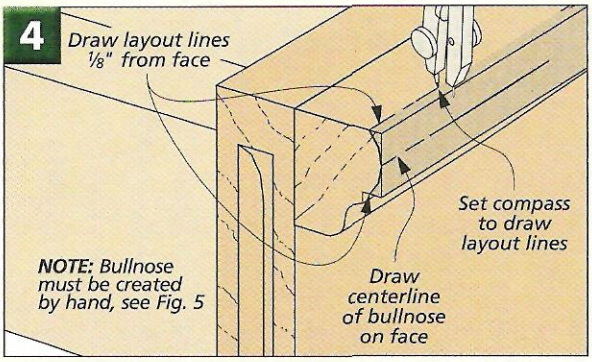

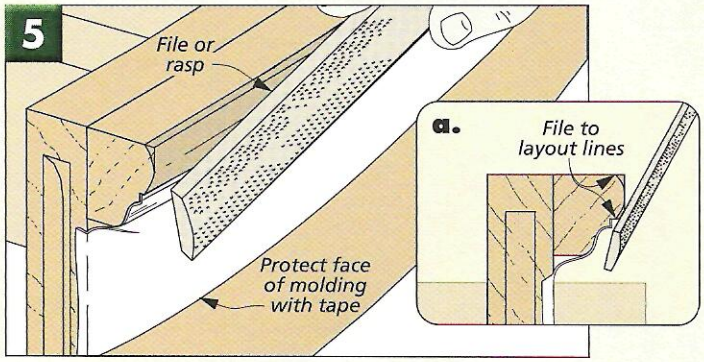

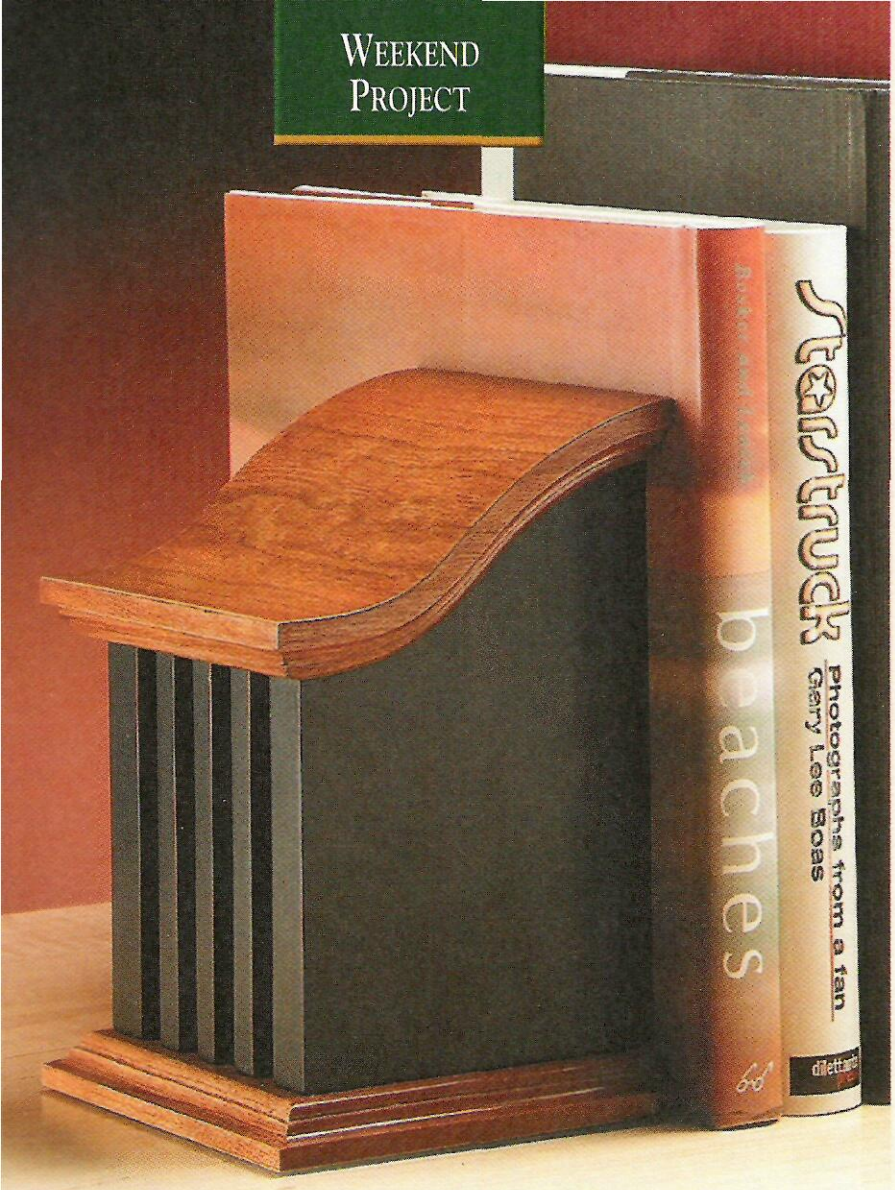

ARCH-TOP BOOKENDS

Ready to tackle the molding on these bookends? Don't worry. There's nothing here that's going to throw you a curve.

Every woodworker who sees these bookends asks the same question: "How did you do it?" You've got to admit, the answer isn't exactly obvious. Even though you know the top hasn't been literally bent into its curved shape, there aren't many clues that might suggest how it's done.

One of the tricks is to work with oversized pieces. After a little shaping, some molding pieces are mitered to wrap around the body (which is also oversized). Then you begin the process of cutting and sanding the curve on the top. And to hide the evidence, a piece of veneer is simply glued to the top. It's a fairly straightforward process for creating a pretty impressive detail.

FINISHING OPTIONS. From the start, I decided to paint these bookends. And as you can see in the photos, there's more than one way to do this. Your choice of paint may affect the materials you use, so it's a good idea to take a look at the finishing article on page 22 before getting started.

BODY. Regardless of the finish you use, I'd

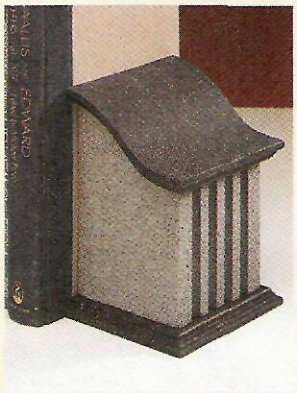

▲ *This project is a great one for trying a faux finish, see page 22.*

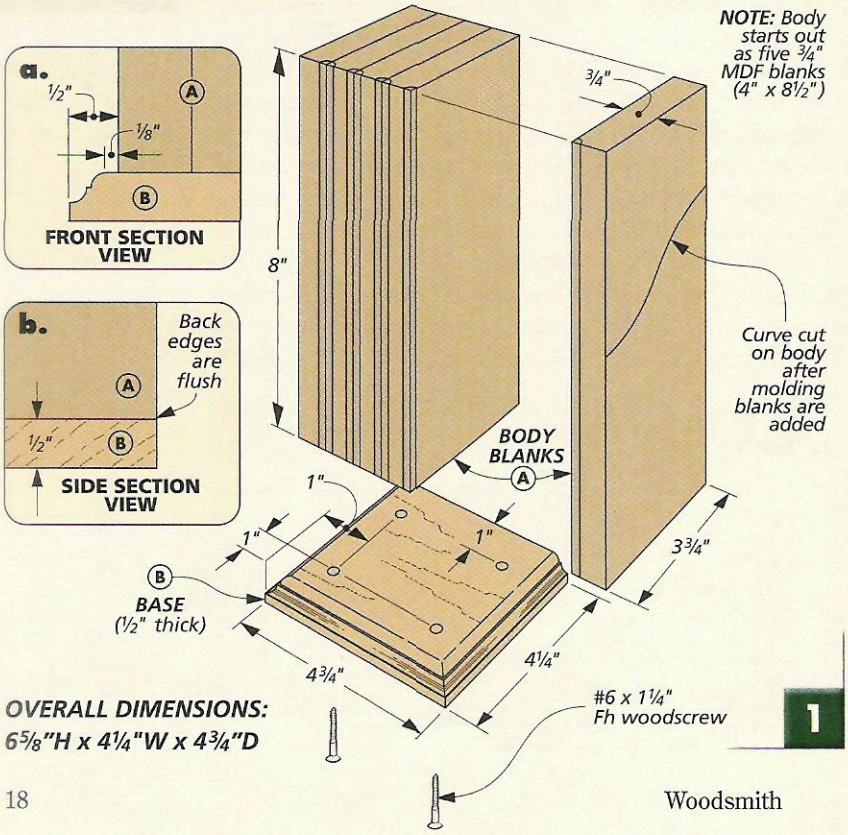

1

MATERIALS & SUPPLIES

A	Body Blanks (10)*	3/4 MDF - 4 x 8 1/2 rgh.
B	Bases (2)	1/2 x 4 1/4 - 4 3/4
C	Curved Molding (4)	1/2 x 4 1/2 - 4 1/2 rgh.
D	Straight Molding (2)	1/2 x 4 1/4 - 5 rgh.

- (8) #6 x 1 1/4" Fh Woodscrews
- (2) Cherry Veneer (4 1/2" x 5")
- (2) Non-Slip Tape (4 1/4" x 4 3/4")

*Note: Materials are for 1 pair of bookends

recommend ¾" MDF for the body, as shown in Fig. 1. This isn't just because MDF is cheaper — it's also more stable. Changes in humidity aren't going to cause it to expand and contract over time and work the molding joints loose. Plus, MDF provides a good surface for paint.

The body starts out as five *body blanks (A)* that are glued together. Fig. 1 shows the final size, but you'll want the rough blanks a bit larger. (Mine were 4" x 8½".) After the glue dries, the body can be ripped to width (3¾"), but it should be left long (8") until the molding is added.

Trimming the body is easier said than done. It's too large for a single pass at the table saw (and may even be too big to crosscut with some miter saws). So you'll need to make two passes, as shown in Fig. 2 at right. Then to remove any shoulders or saw marks, you might want to do a little sanding. I did this with some adhesive-backed sandpaper placed on a flat surface (like a table saw), as shown in the margin photo.

ROUT FLUTES. When the body is cut to size, all that's left is to rout some flutes on the front edge. I did this with a ⅜"-dia. core box bit at the router table, as in Fig. 3. You don't even need to get out your ruler to set the fence. Just center the bit on a joint line and make two passes, flipping the body end for end between passes. Then reset the fence and rout the other pair of flutes.

BASE. At this point, the body is done, and you're ready to work on the base (Fig. 1). Mine is ½"-thick cherry, but if you're going to paint the entire bookend, then you can use almost any ½"-thick hardwood. (I'd recommend you avoid "open grain" woods like oak and ash. You can't paint over them as smoothly as you can "fine grain" woods like cherry, maple, and poplar.)

The *base (B)* is cut to extend past the body ½" on the front and sides. If you're not going to paint the base, you'll want to make note of its grain direction, as shown in Fig. 1. I oriented the piece this way so it would match the grain of the top veneer that's added later.

ROUT PROFILE. The base is routed on three sides. And I did this with a "Classical Cove & Bead" bit (refer to page 35 for sources). But you could also use a Roman ogee bit, as shown in the margin at right. To orient the profile correctly, the base piece needs to stand on edge when routing, as in Fig. 4. I took light passes to avoid chipout, sneaking up on the final depth of the cut by adjusting the fence to expose more of the bit.

Finally, you can screw the base to the body so the back edges are flush, as in Fig. 5. But don't use any glue. The bookends will be easier to finish if you can remove the base.

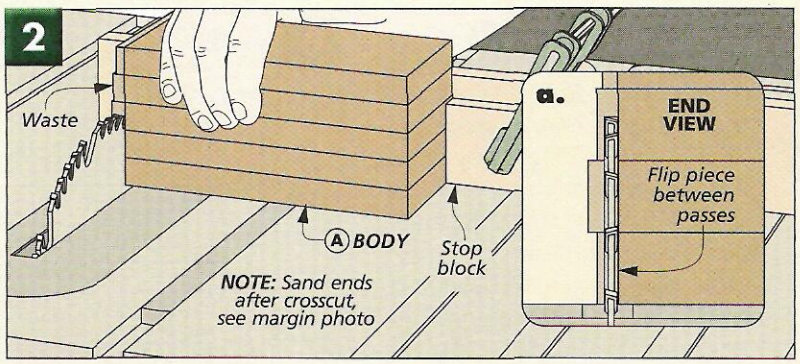

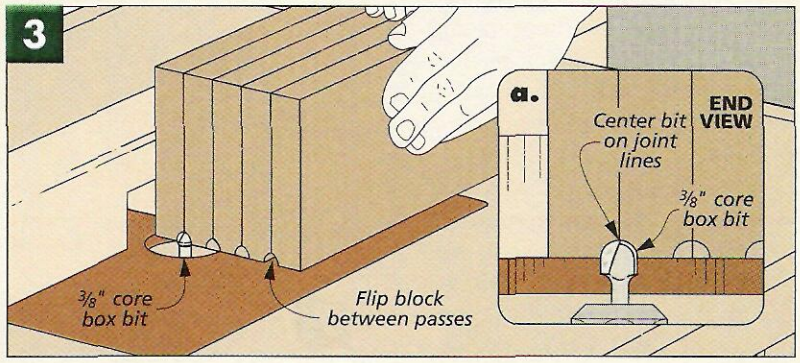

▲ *Adhesive-backed sandpaper on a table saw makes a flat surface for sanding the ends of the body blank.*

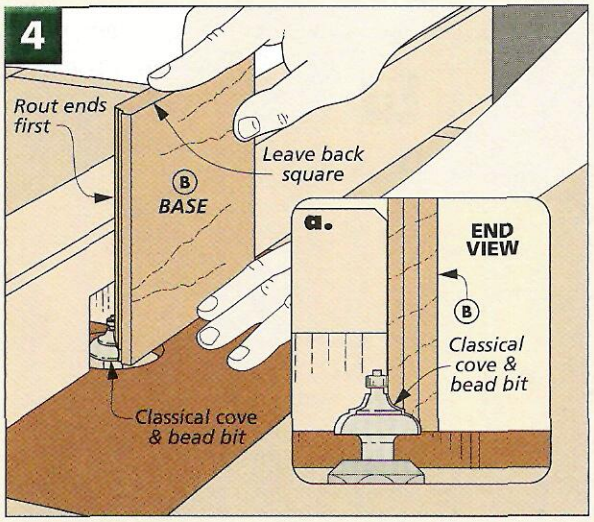

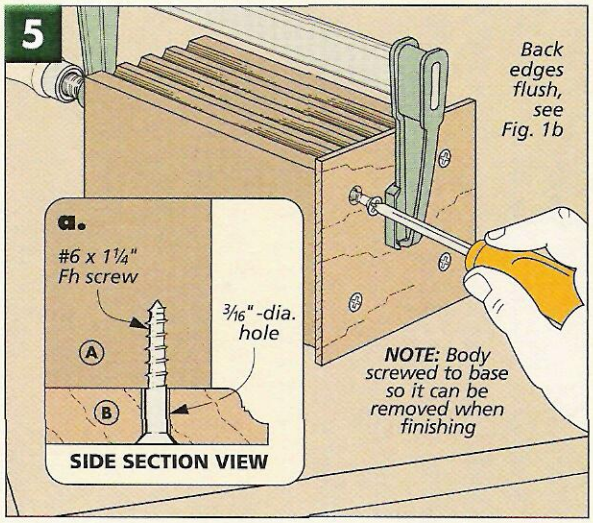

BASE PROFILE OPTION

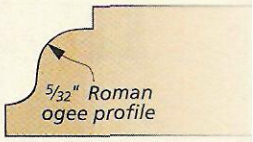

▲ *You don't have to use the classical cove and bead profile I chose for the base and molding. The profile shown here is a little more common and will work just as well.*

Molding & Veneer

Now that the body and base are built, you're ready to add the molding and the veneer to the top. As you can see in Fig. 6, the molding starts out as three large pieces. They're mitered and glued to the body, and the whole assembly is cut to shape.

The veneer covers the joint lines and MDF. And it's actually one of the easier parts of the bookends. The grain is oriented so the veneer lays down nicely. And the trimming can be done with a sanding block.

If you're making multiple sets of bookends, you may want to make a cardboard template for tracing the curved profile on the moldings.

MOLDING BLANKS. The first thing to do is cut ½"-thick blanks for the molding, as shown in Fig. 6. The *curved molding (C)* and *straight molding (D)* are oversized in both length and width. (Note that the curved pieces are 4½" wide to start out. The straight piece is 4¼" wide.)

CREATE CURVES. The next thing to do is lay out the curve on one of the curved molding blanks. To help with this, the pattern on the next page can be photocopied at 100% and cut out. But if you plan to build more than one set of bookends, you may want to make a more durable posterboard template, as you can see in the photo in the left margin.

With one of the pieces laid out, I taped the two curved molding blanks together, using carpet tape, as in Fig. 7. This way, their profiles would end up exactly the same. Cutting the curves was a quick job with the band saw. Just stay to the waste side of the lay out line. Then the saw marks can be removed and the profile fine-tuned by doing a little sanding. (I used a drum sander.)

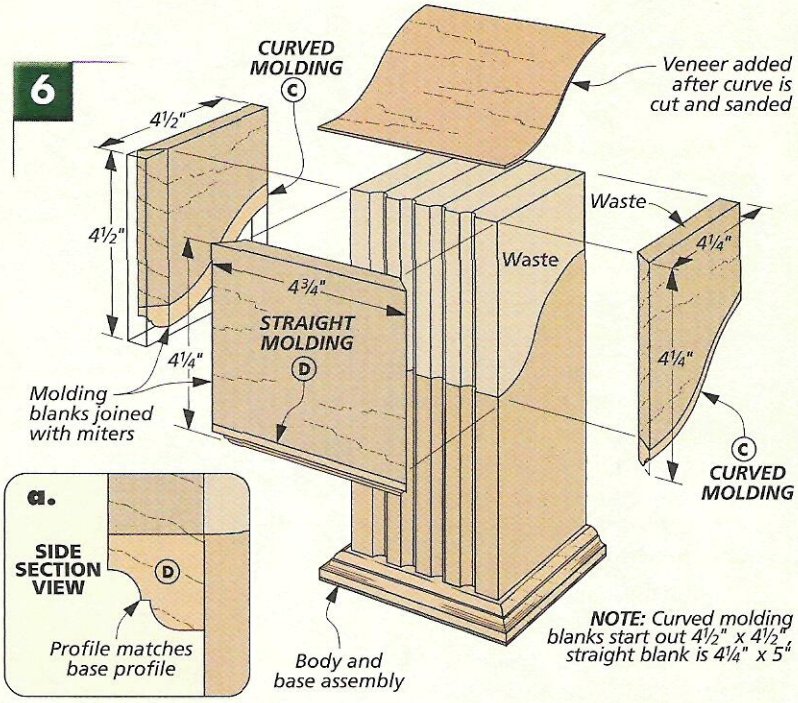

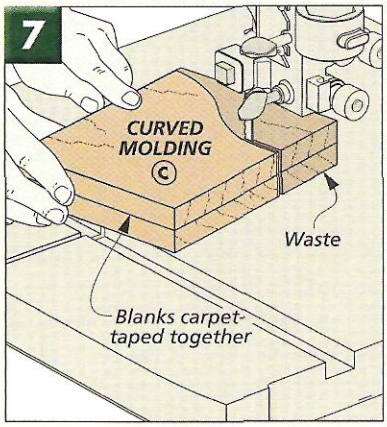

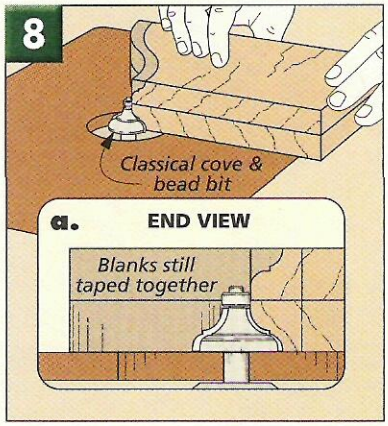

ROUT PROFILE. Now the curves you just cut will get a routed profile, using the same bit that was used on the base. But as you can see in Fig. 8, this time the pieces have to lay flat on the table so you can use the bearing on the bit to guide the curved edges. And to make sure the bearing had something to ride against, I left the pieces taped together (Fig. 8a).

The straight molding also gets this same profile. This time, though, I used my router table fence to guide the piece across the bit.

Once the profiles are routed, you can miter the molding pieces so

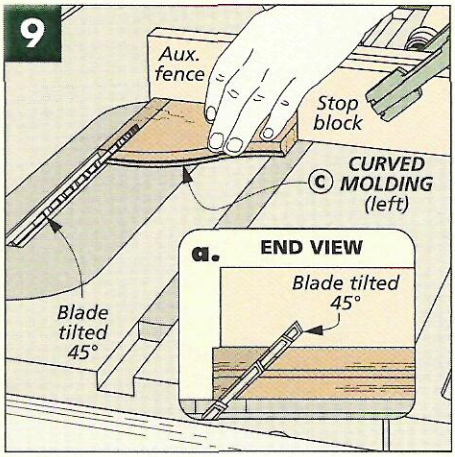

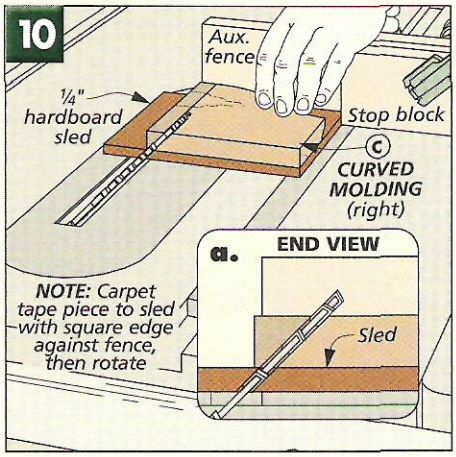

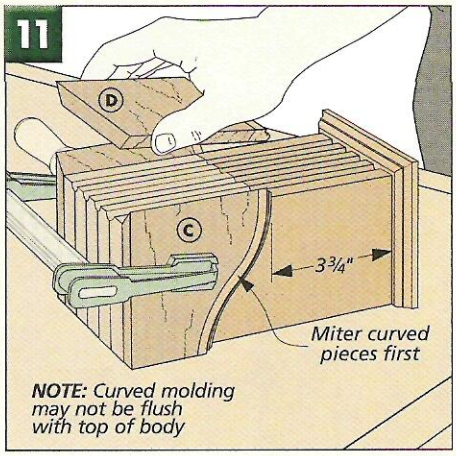

they wrap around the body. For all the pieces, the blade is tilted 45° and an auxiliary fence and stop block provide support, as in Fig. 9.

I started with the curved molding. They end up mirrored images of each other, so you can't cut them both the same way. The square edge of one piece (the left) simply rests against the auxiliary fence, as in Fig. 9. But the other piece (the right) will have to be flipped around so its curved edge is against the fence (Fig. 10). So to keep this piece square to the fence, I taped it to a hardboard sled first and then flipped it around to make the cut.

When the two curved pieces were mitered, I clamped them in place so they lined up 3¾" from the bottom of the body, as indicated in Fig. 11. The top edges of the molding pieces and body may not line up, but that doesn't matter — it's going to get cut away soon anyway. The important thing is that the bottom edges of all the pieces align.

Now you can miter the straight molding to fit between the curved pieces, as you can see in Fig. 11. (Remember that your focus should be on the bottom ½" of the molding.) Then with all the molding pieces mitered to length, you can go ahead and glue them to the body.

SHAPE TOP. At this point, you're ready to shape the top of the bookend. It should match the curved edge of the molding, which is easy enough to do. Just set a compass to

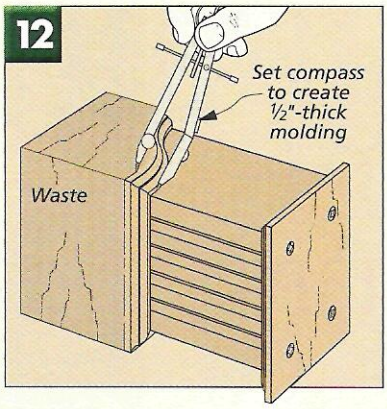

draw a parallel line ½" up from the bottom edge, as shown in Fig. 12. Then you can cut the curve on the band saw (Fig. 13). But don't force the cut — this is a pretty thick block, and you don't want the blade to wander as it's cutting.

Since the top face of the bookend is too large for a drum sander, smoothing it takes a little elbow grease (but not much else). I used a regular, flat sanding block to work on the outside curve. For the inside curve, you'll need a rounded sanding block. The important thing is that you end up with a smooth, flat surface for applying the veneer.

APPLY VENEER. As you can see in Fig. 14, a small piece of veneer will hide the MDF and the joint lines on top of each bookend. I used solid-wood veneer here (not pressure-sensitive or paper-backed). And to glue it down, I used a gel-formula contact cement. (Yellow or white glue can work its way through the veneer and affect the finish.)

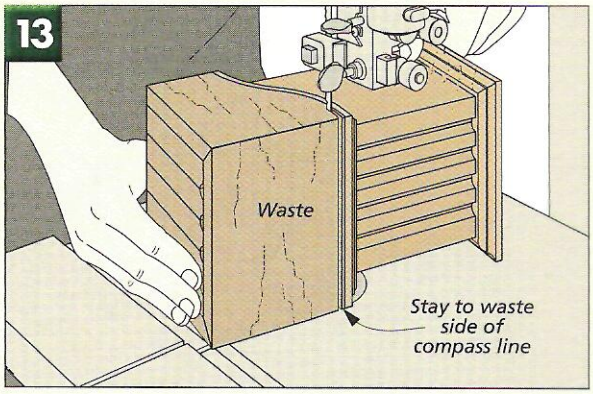

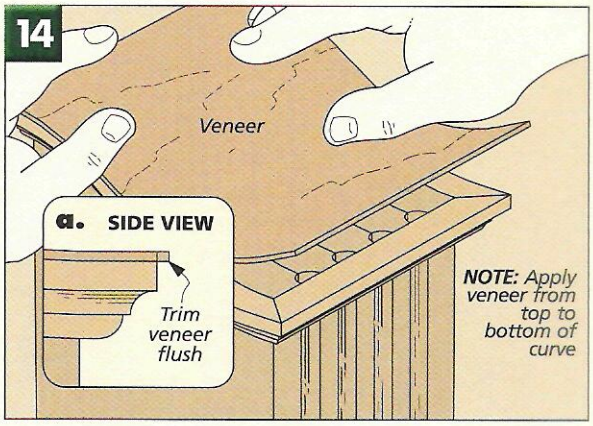

As you lay the veneer down, make sure its grain runs from curved edge to curved edge (Fig. 14). This way, it'll almost form itself to the curves.

Trimming the veneer isn't a problem either. In fact, you could do the entire thing with a sanding block, though I trimmed just the curved edges this way. For the straight ones, I used a sharp utility knife. Then I finished the project (see the tips on page 22) and added the non-slip tape in the photo below. W

TEMPLATE FOR TOP CURVE

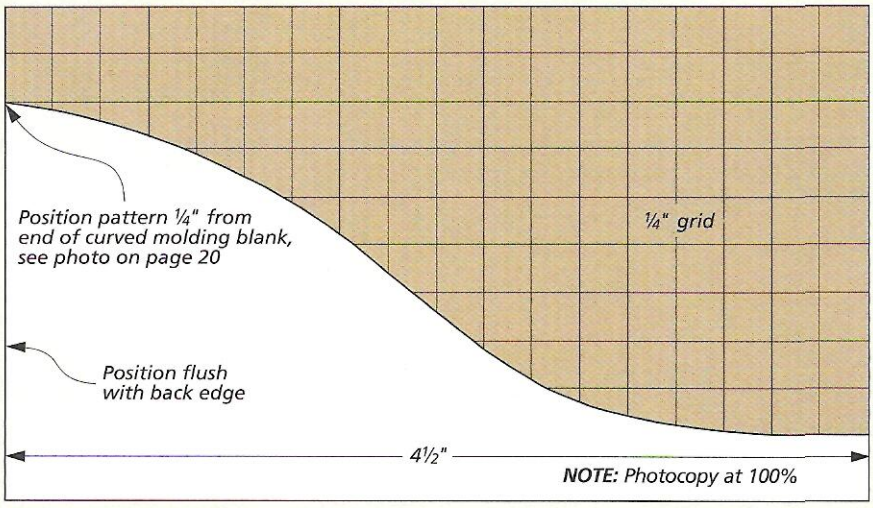

▲ *To prevent the bookends from sliding under the weight of books, I added adhesive-backed non-slip tape that's made for stair treads.*

5 QUICK PRO PAINT TIPS

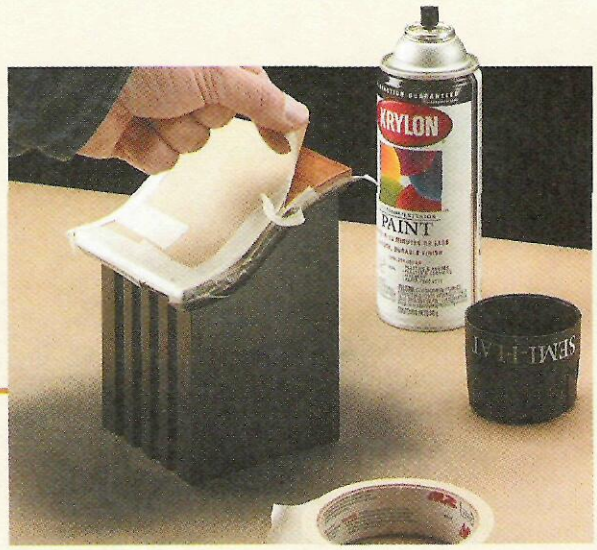

▲ *The top and base of the bookends were given a clear top coat and then masked off. But be sure to give the finish plenty of time to dry before applying the tape.*

Spray painting is easy, right? Just shake, point, and spray. But if you've ever ended up with runs or accidentally sanded down to bare wood, you know that there's more to a smooth, consistent spray finish than just pointing a can in the right direction. Here are five quick "tips" to consider the next time you're finishing with spray paint.

1. REMOVE PARTS. Whenever you can, remove a part (like a door or top) before you start to paint. Flat surfaces are easier to cover evenly than inside corners. Just don't forget to cover any surfaces that will need to be glued later.

On the bookends I was able to unscrew the base, which meant one less area that needed to be masked.

2. PUTTY FILLER. Don't be fooled into thinking a coat of paint is going to hide scratches or dents. The uniform color of paint on a flat, smooth surface will actually "telegraph" these blemishes. So don't rush the sanding process.

I didn't end up with any scratches or dents on the bookends. If I had, I would have used automotive glazing and spot putty — it doesn't shrink.

3. CHOOSE THE RIGHT PAINT. You have two choices when using spray paint: enamel and lacquer. Enamel is more durable, and I'll use it if a project is going to be handled or sit outdoors. But enamel is less convenient to work with. You have to recoat within one hour or wait several days. For the bookends, I chose lacquer because I could apply a lot of coats quickly.

4. PROTECT THE CORNERS. Anytime you're sanding primer or paint, try to avoid the corners of a project. You can cut through to the wood a lot quicker along an edge because it's easy to "roll over" the corner and apply more pressure along that point.

5. APPLY A CLEAR COAT. After I've applied several coats of paint, I like to follow up with three or four layers of a clear coat. It simply adds to the protection and can even provide depth to the finish. W

FAUX FINISHING OUT OF A CAN

If you think it takes a great deal of artistic talent to do faux finishing, you might want to take a look at these bookends. Both finishes came out of a can — a spray paint can. They're so easy you really should give them a try.

Since the top was being painted on these bookends, I didn't take the time to add veneer. Instead, I cut a dowel in half and plugged the openings left by the cove bit, as shown in the drawing. (A little putty can be used to fill in any gaps in the opening.)

After giving the bookends a couple coats of primer, the faux finishes can be applied. (For sources, see page 35.) The crackle finish at left is the easiest. You simply spray on a base coat and then a crackle coat. The size of the crackle can even be adjusted by how heavy a coat you spray on. The stone-textured finish at right required a little modification to get the best results.

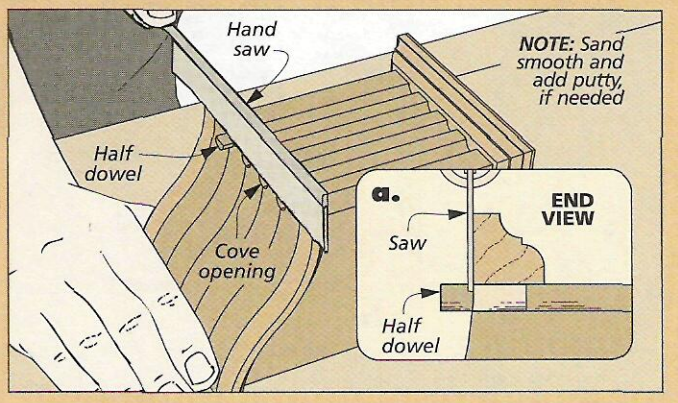

Textured Stone. *Keeping the texture of this finish from being too heavy required an extra step. After priming the bookend, I taped off the body and painted the top and bottom black. Then I sprayed on a very light coat of the black, textured finish.*

Next, you can mask off the top and bottom and apply the gray, textured finish.

SHOP NOTES

Laying Out a Symmetrical Curve

One of the challenges of the Arch-Top Headboard (page 6) is laying out a large, symmetrical curve and having it look just right. The easiest way to do this is to draw a half-pattern on paper first. The half-pattern makes getting a symmetrical finished piece automatic. All you have to do is flip it over and trace a mirror image.

To make the pattern, I laid out a 1" grid on a piece of paper at least half the size of the final curve. Then transfer the curve from the pattern on page 7 to the grid. The next thing to do is make a hardboard template. I mounted the half-pattern to a piece of hardboard with spray adhesive. Then it can be cut out on the band saw, as in Fig 1. You'll want to cut to the waste side so it can be sanded smooth on the drum sander.

Now that the pattern's ready, you can lay it out on the workpiece, as in Fig. 2. But before you start cutting, take a step back and look at the entire curve. If you notice any flat spots or angles, you'll want to adjust the template. Once you're satisfied, you can begin cutting. W

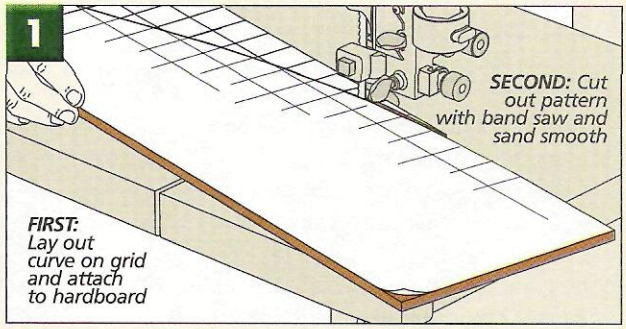

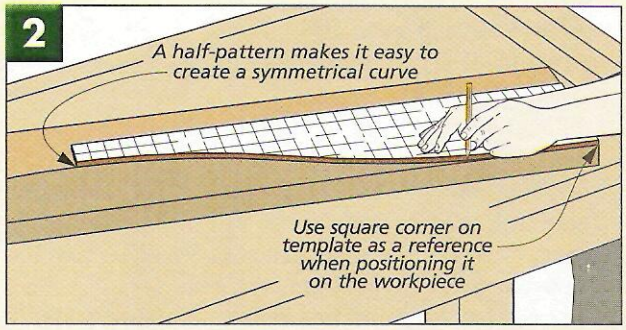

Plywood Shadow Line

If you don't plan on staining the cherry Paneled Blanket Chest (page 26) you'll be able to see the inner veneers of the plywood panel in the shadow line. These exposed plies are lighter and look unfinished, as in the left photo.

To give it a "finished" look, I created a darker, more distinct shadow line, as you see in the far right photo. This is easy to do with a brown permanent marker. But you'll need to do it before attaching the hardwood edging.

By the way, you can't do this with stain (or a stain stick). The stain will wick up the edges of the plywood and cause surface streaking. And even if you use a marker it's still a good idea to test it on a scrap piece of plywood first just to be safe. W

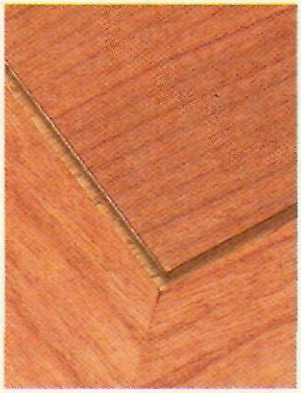

▲ *An unfinished shadow line exposes the lighter core of the plywood.*

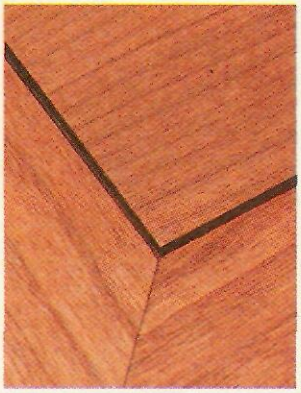

▲ *When the shadow line is stained darker, the effect is more dramatic.*

Chamfer Clean-up

When you rout a stopped chamfer, its end isn't symmetrical. If you take a look at the left workpiece in the photo, you can see that one side ends up a bit "flat." But here's a quick solution. Simply wrap sandpaper around a ½"-dia. dowel and carefully sand the end, as shown in Fig. 1. It won't take much to get both sides looking the same. W

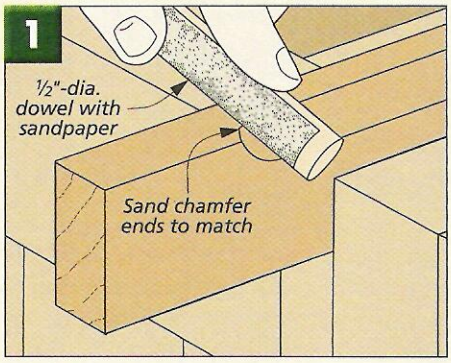

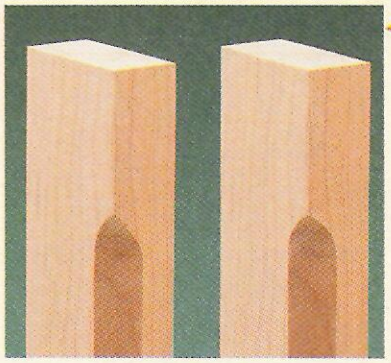

◄ *Stopped chamfers look "flat," as in the left workpiece. So they need to be sanded to even out the end, like you see in the right workpiece.*

INSTALLING A HALF-MORTISE LOCK

When it comes to selecting a lock for a chest, the choices can be intimidating. As I was looking for a lock for the blanket chest (page 26), I realized there are a lot of options and models to choose from.

But when it comes right down to it, there are really only two styles — full mortise and half mortise. Full-mortise locks are set in a deep pocket cut in the front edge of the chest. The trouble is they can be difficult to install once the case is assembled. That's why I chose a half-mortise lock.

CHOOSING A LOCK. The first thing I look for when choosing a lock is the location of the keyhole on the outside of the case. For my chest, I wanted the keyhole to be centered (top to bottom) on the top rail of the chest. (Most hardware suppliers list the distance from the top edge of the lock to the keyhole pin.)

Another thing to look for is the height (depth) of the lock. If the lock is too deep, it could extend past the bottom of the rail and interfere with the panel. Before building any piece that requires a lock, it's a good idea to have the lock in hand so there won't be any surprises.

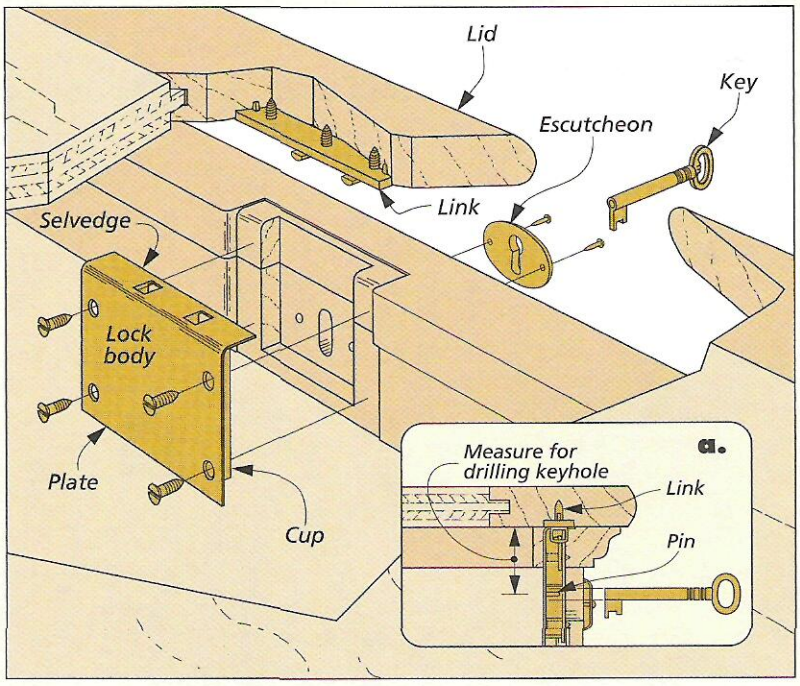

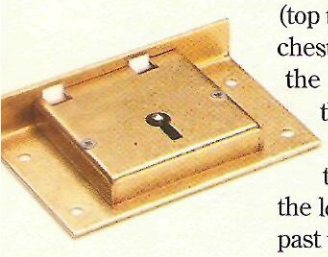

▲ *The lock body is mortised into the inside of the chest.*

LOCK PARTS. The lock set that I chose is made up of two parts: the lock body and the lock link. The lock body is recessed in the inside edge of the case, while the link gets mortised into the lid.

As you can see in the exploded view above, the lock is installed in a stepped mortise. There's a shallow mortise that wraps around the inside back edge for the plate (back) and up over the top of the rail for the selvedge (top) of the lock. Then there's a deeper mortise, which provides clearance for the cup (or body) of the lock.

The link gets mortised into the lid. Here, two tabs stick out from the link and are grabbed by the lock when the key is turned.

To complete the lock, a key fits through a small hole drilled in the

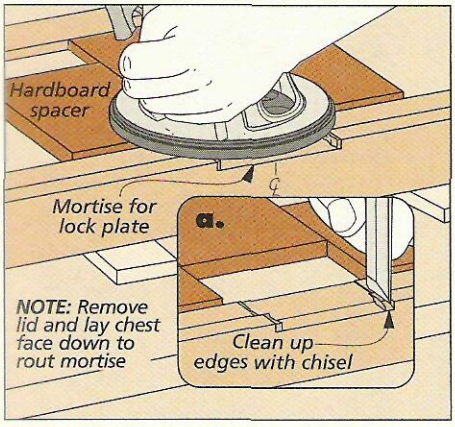

1 *Turn the chest on its front and trace the lock on the chest. Attach spacers and rout the mortise using a ¼" straight bit. Clean up the edges with a chisel.*

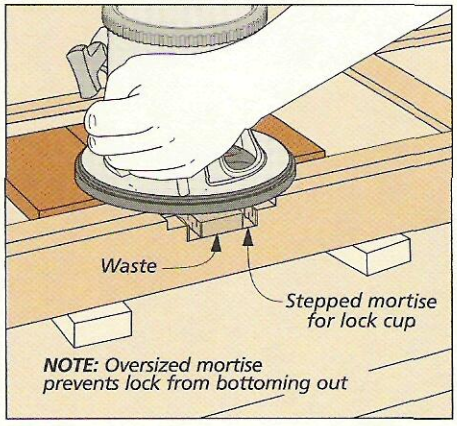

2 *Mark and rout a stepped mortise for the cup, again using spacers to support the router. The mortise should be long enough for the lock to sit flush with the top.*

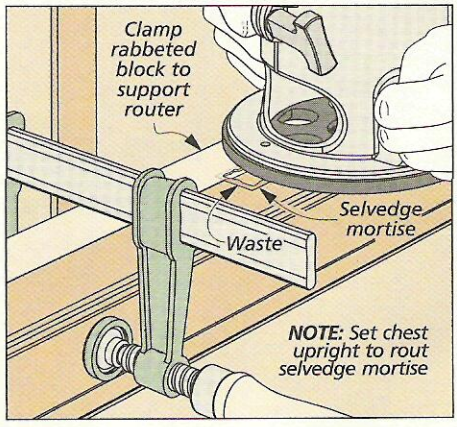

3 *Flip the chest upright and trace the outline of the top of the lock on the case. Clamp a rabbeted support block to the top and rout the selvedge mortise.*

front of the case. And an escutcheon is mounted on the outside of the chest to protect the keyhole.

A half-mortise lock installs in just a few steps. And all it takes is careful layout and a few common tools.

LOCK BODY. The lock is mortised flush to the inside of the chest. Start by marking a centerline on the top of the chest front. Then hold the lock in place with the keyhole on the centerline and trace the outline on the inside of the case.

PLATE. To rout a shallow mortise for the plate of the lock, I first removed the lid and flipped the chest on its front.

Shop Tip: On projects where I'll be removing and attaching the lid several times, I've found that the soft brass screws strip out or break off. To avoid this, I use steel screws until the installation is complete and then replace the brass screws.

To make a wide surface for the router, I attached some hardboard spacers to the rail (Step 1). Then I routed the mortise with a 1/4" straight bit, staying just inside the layout lines. For a tight fit, I cleaned up the edges with a chisel.

The next mortise you'll rout is for the cup. What you're looking for here is that the lock should sit flush with the top and back of the chest. So I routed the mortise a little longer and deeper than the cup, as you can see in Step 2.

SELVEDGE. With the stepped mortises routed, you can cut the selvedge mortise. To do this, flip the chest upright and trace the outline of the top of the lock on the case. Again, you'll need to clamp a support block to the top, as in Step 3. (I routed a small rabbet in the block so the top molding would fit inside.)

ESCUTCHEON. At this point, I turned my attention to drilling the keyhole and installing the escutcheon. To mark the keyhole on the chest, press the lock into the mortise. A pin sticking out from the keyhole in the lock marks where to drill. If the pin doesn't stick out past the cup, measure from the top of the lock to the pin, as shown in detail 'a' in the exploded view at left.

To prevent tearout, clamp a piece of scrap to the front of the chest and drill the hole from the inside, as in Step 4. Then file a slot for the bit of the key (Step 5). It's a good idea to test the fit by screwing the lock in place and locking and unlocking it, adjusting the hole as necessary.

LINK. Now you're ready to attach the link to the lid. The easiest way to mark the link mortise is to secure it in the lock and close the lid. Small tabs in the link dent the lid, allowing you to lift the lid and trace the link, as in Step 7. After routing the mortise (Step 8), screw the link in place. All that's left is to reattach the lid.

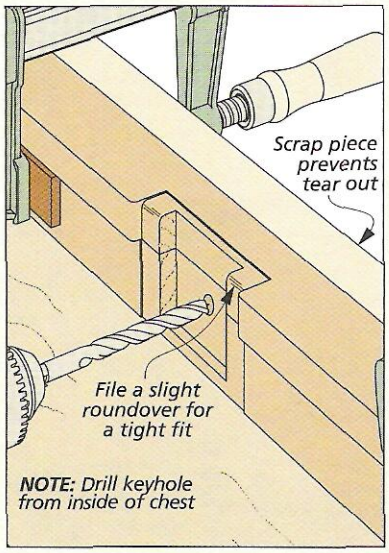

4 *Press the lock into the mortise to mark keyhole location (or measure from top to center of the pin). Drill the hole from the inside.*

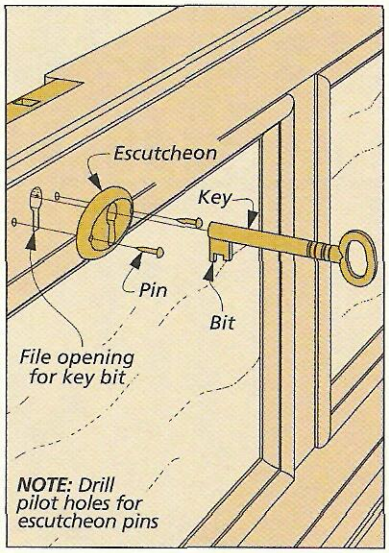

5 *File a slot in the bottom of the keyhole for the key bit. Drill pilot holes for the pins, but wait to attach the escutcheon until after finishing.*

▲ *The escutcheon guides the key and protects the keyhole from excess wear.*

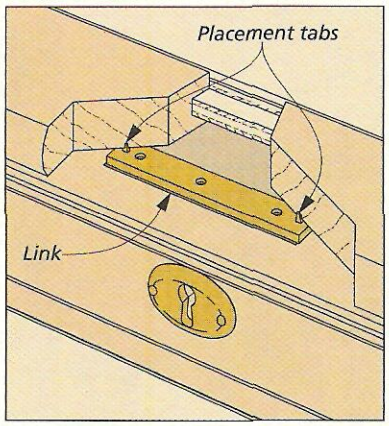

6 *Reattach the lid. Fasten the link in the lock and press lid down. Placement tabs will create dents for marking and mortising the lid.*

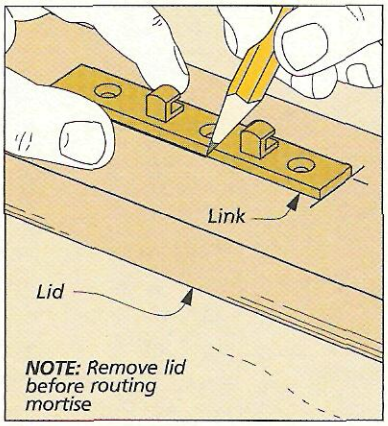

7 *After removing the lid from the chest, set the link in the dents and trace the outline on the lid with a sharp pencil or marking knife.*

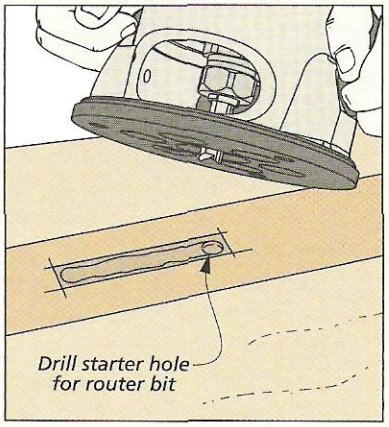

8 *Drill a starter hole for the router bit and rout the mortise. Then clean up the mortise with a chisel and screw the link in place.*

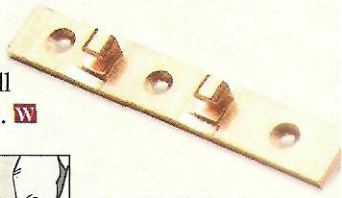

▲ *The link plate is mortised flush with the surface of the lid bottom.*

HEIRLOOM PROJECT

PANELED BLANKET CHEST

This paneled blanket chest is beautifully detailed from top to botttom. But "detailed" doesn't have to mean difficult.

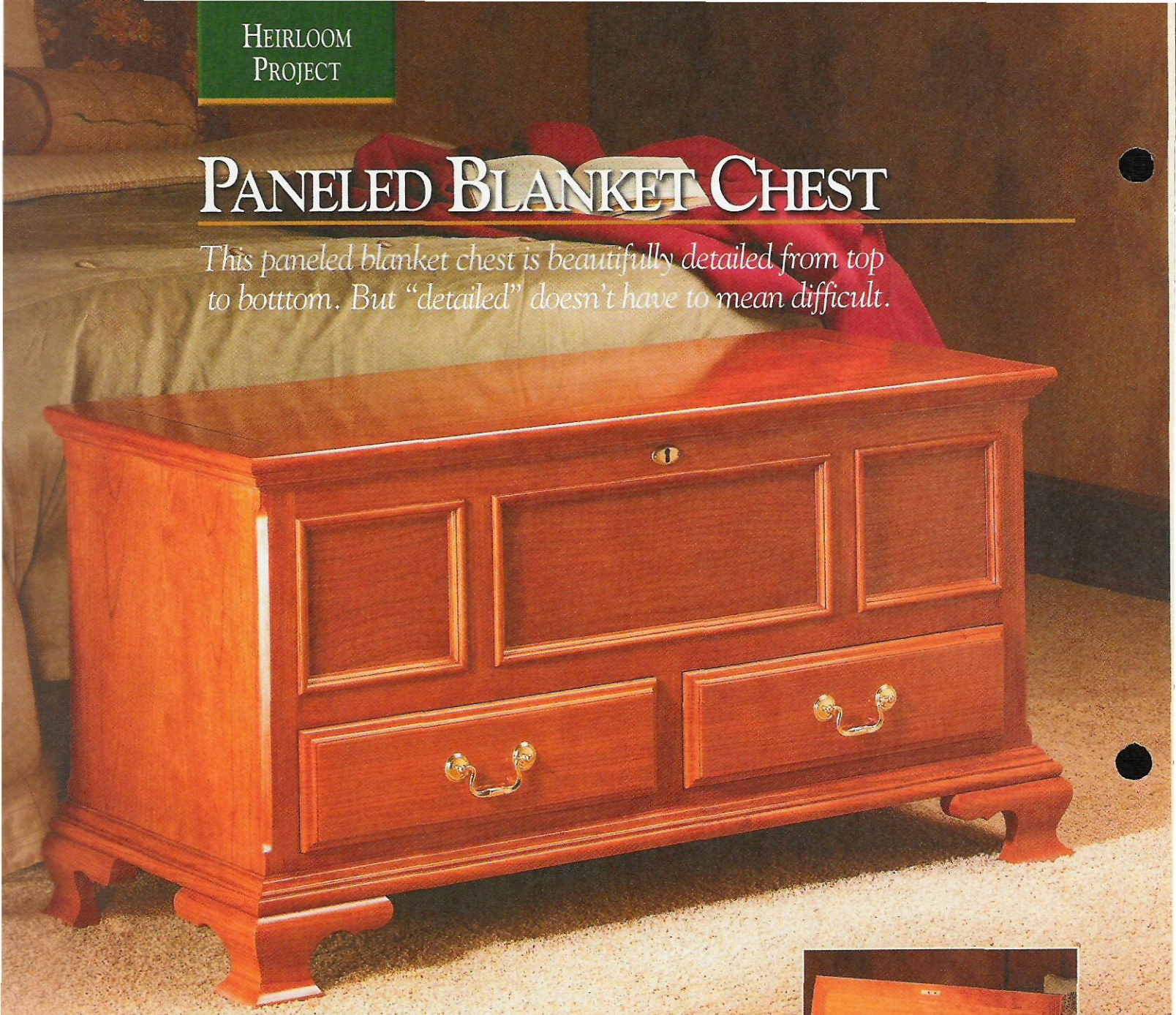

What immediately draws your attention to this paneled blanket chest is all of the detail — the sculptural bracket feet, the layered molding at the base, the chamfered corners, the balance of the molded panels and the drawers, and the bullnose lid with its narrow shadow line. All these elements combine to give this piece a really impressive, graceful look.

But don't let all the details intimidate you. This project isn't really very difficult to build. The chest was designed to partner with the bedside chest in *Woodsmith* No. 139, and like its companion piece, it's all pretty straightforward.

The large panels are all cherry plywood so there are no solid-wood panels to glue up. The joinery is pretty simple, mostly just tongue and groove or stub tenon and groove. The moldings that provide a lot of the interest to the piece may look tricky, but they're just made with a few "special" router bits.

The only thing that could be a small challenge are the bracket feet. But don't worry if you've never made bracket feet. You can find easy instructions in *Woodsmith* No. 139, or they can be downloaded for free. Or the "ogee" base pictured on page 34 makes a great alternative.

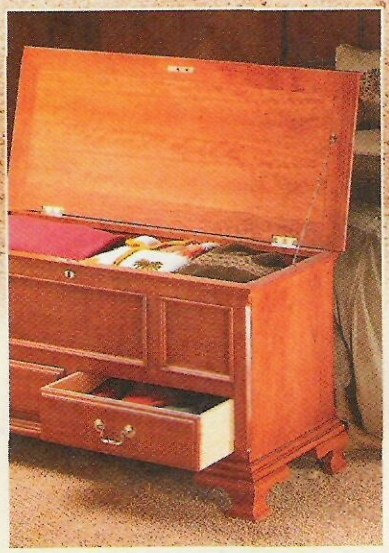

▲ *This chest not only looks great, but with two drawers and a nice deep well, it provides plenty of versatile storage space.*

Construction Details

OVERALL DIMENSIONS:
45¾"W x 19⅜"D x 23¾"H

NOTE: Front and back face frames are identical except for drawer openings

NOTE: Face frame is joined with stub tenons and grooves

Lid panel and frame are joined with tongues and grooves

LID FRAME SIDE

LID PANEL

Chest lock half-mortised into case

NOTE: Base molding and cap molding have identical profile

Brass butt hinge mortised into lid and case

Panels are ¼" plywood

PANEL MOLDING

Panel molding is glued in place around inside of panel openings

CAP MOLDING

CASE SIDE

Case sides are ¾" plywood

Drawer false front screwed to dovetailed drawer

Stopped chamfer on all four corner stiles

¼" ogee with fillet

Plastic stem bumper

Spacer strips are glued and screwed to bottom divider

DRAWER SIDE

Base frame is glued and screwed to underside of case

Brass bail pull

DRAWER FALSE FRONT

DRAWER GUIDE

Half-blind dovetailed drawer

BRACKET FOOT

BOTTOM SIDE SECTION VIEW

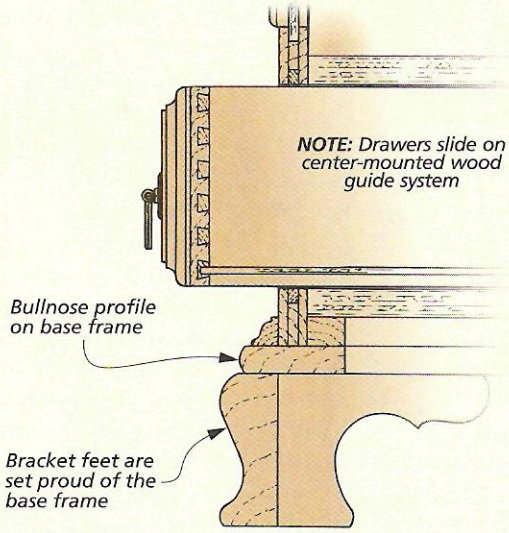

TOP SIDE SECTION VIEW

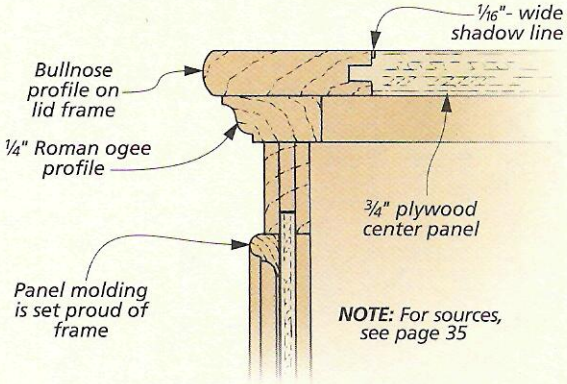

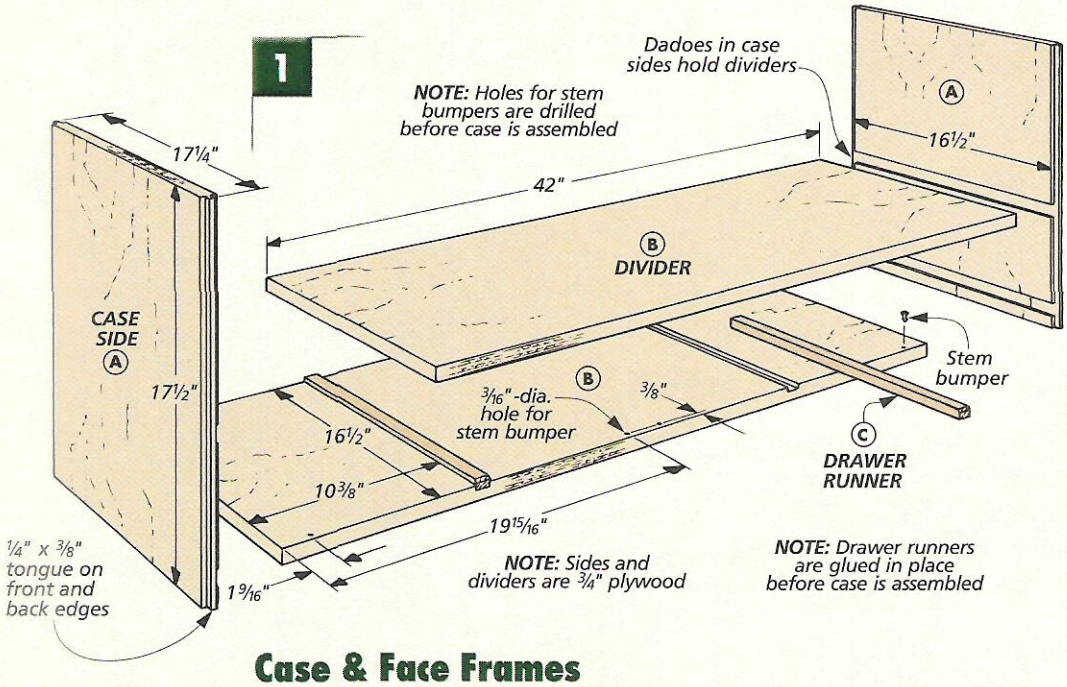

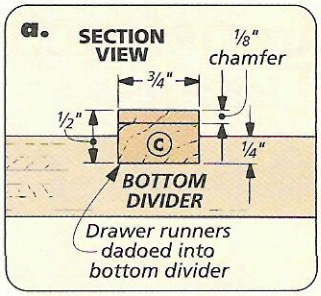

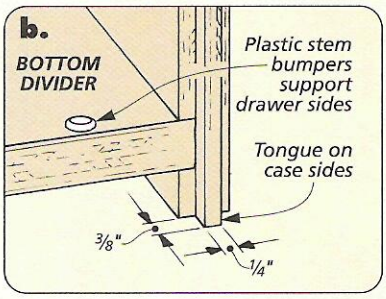

Case & Face Frames

I started with the basics, a simple plywood case, and then tackled the paneled face frames. The case is just two ¾" plywood sides that are joined by a couple dividers. And I decided to put a tongue on the front and back edges of the sides to make it easier to add the face frame later on (Figs. 1 and 4). The face frames are made to hold ¼" plywood panels, with openings in the front for drawers.

PLYWOOD CASE. The first thing I did was cut the two *case sides (A)* to size from ¾" cherry plywood. Now as you can see in Fig. 1, there are a pair of dadoes in each side that hold the ¾" plywood dividers. What I like to do when cutting dadoes for plywood is to use a narrower dado blade. (I used a ⅝"-wide blade here.) Then I can sneak up on the width of the cut to get a perfect fit (Fig. 2a).

Next, I used the dado blade buried in an auxiliary fence to cut the centered ¼"-wide tongues on the front and back edges of the sides, as shown in Figs. 3 and 3a.

DIVIDERS. When the sides are completed, you can cut the two *dividers (B)* to size. They're cut to length so that when the sides and dividers are put together the overall measurement is 43". Fig. 1b shows how they should fit front to back.

At this point the joinery has been cut, but before assembling the case, the bottom divider needs a little work. In Fig. 1 you'll notice that the two *drawer runners (C)* are added to this divider. (These runners will work with guides on the drawer bottoms.) I set the runners in dadoes to keep them aligned, which will save you some work when fitting the drawers later. Also, if you knock a chamfer on the ends of the runners, the drawers will slide into the case more easily (Fig. 1a).

And before you assemble the case, you'll need to drill the 3/16" holes in the bottom divider for the stem bumpers that support the drawers. (You can't do this later.)

ASSEMBLY. Now the plywood case is ready for glue and clamps. This should go pretty smoothly. The only thing I watched for was that the dividers were flush along the sides (Fig. 1b). And then after applying the clamps, you probably want to take a quick corner-to-corner measurement to check for square.

PANELED FACE FRAMES. Once you have the plywood case assembled, you can go to work on the paneled face frames, as shown in Fig. 4. The idea here is to size these frames to fit the case. All this takes is a little careful measuring. And since the two face frames are identical except for the drawer openings, you've already got a step up on this.

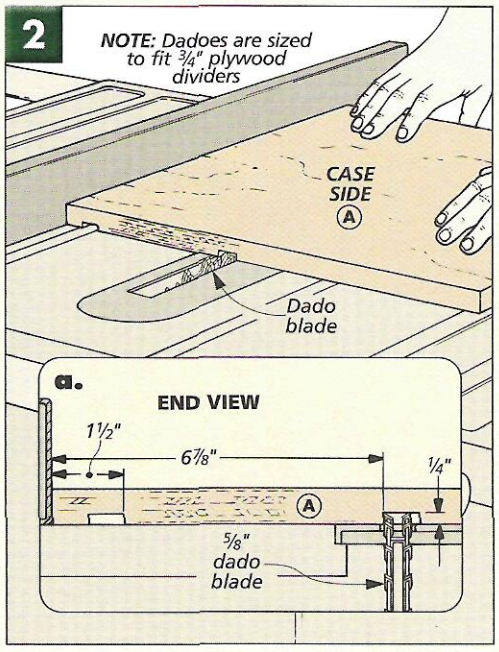

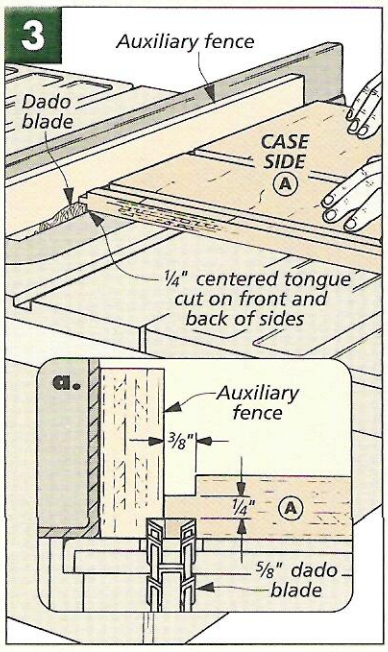

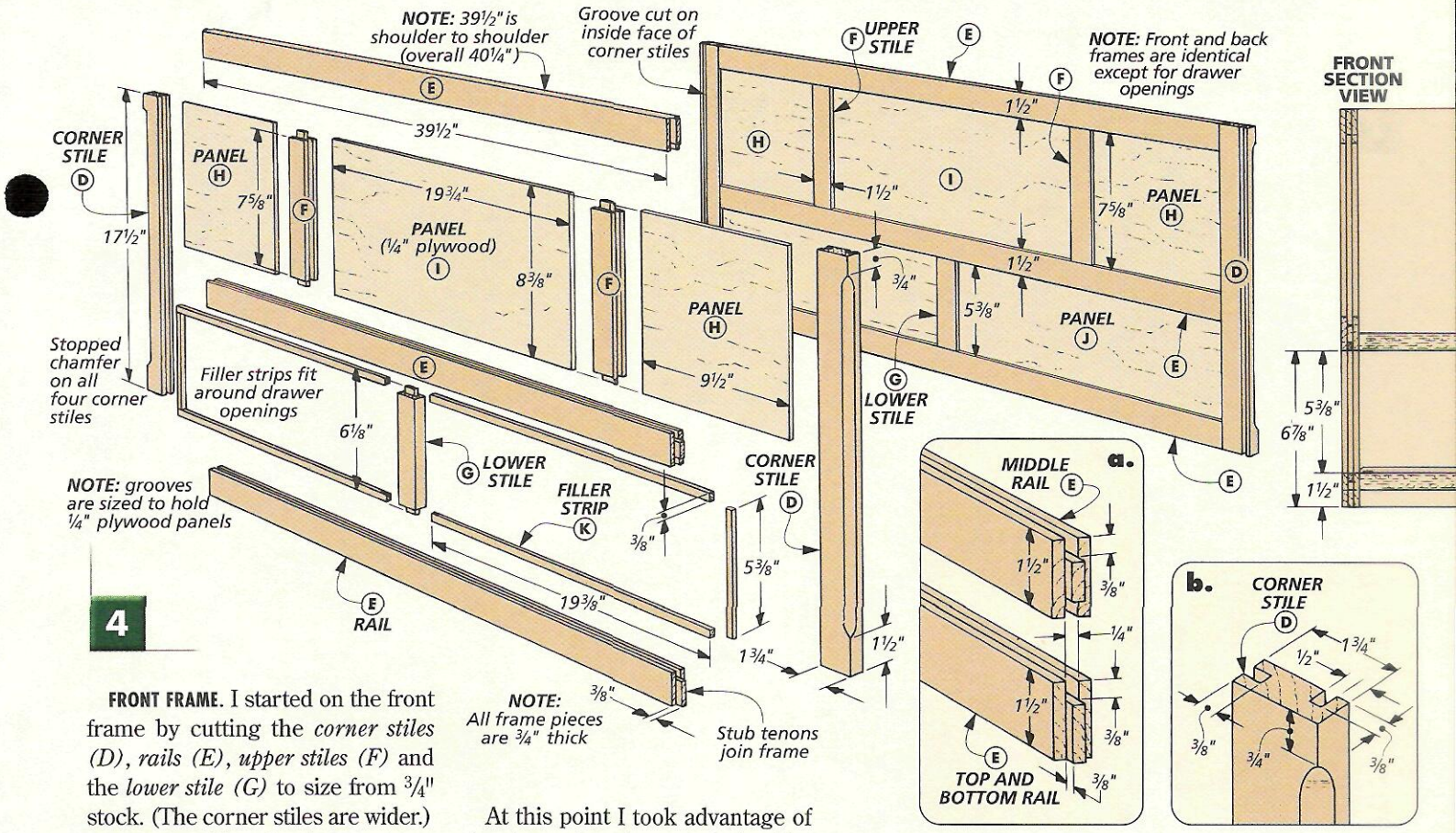

FRONT FRAME. I started on the front frame by cutting the *corner stiles (D)*, *rails (E)*, *upper stiles (F)* and the *lower stile (G)* to size from ¾" stock. (The corner stiles are wider.)

GROOVES. After the frame pieces are cut to size, you can cut the centered grooves sized to hold the ¼" plywood panels. Just run your pieces through the table saw, flipping them end-for-end. You might wonder about the grooves in the drawer openings, but just go ahead and cut full length grooves on all the pieces. You'll put in some filler strips later on. (But I did skip the grooves on the front *lower stile.*)

TENONS. Next I cut stub tenons on the rails and the inside stiles (Fig. 4a). To get a solid frame, these tenons should fit snug in the grooves, so just sneak up on them.

CLAMPED FRAME. With all the tenons cut, I sized the ¼" plywood *panels (H, I)* and then just dry fit and clamped the whole frame.

At this point I took advantage of the clamped up frame to fit the *filler strips (K)* around the drawer openings (Fig. 4). Just make sure the lower stile is centered before you cut the long strips, but there's no need to glue them in yet.

Then I used the clamped frame to locate the grooves in the corner stiles that will match the tongues on the case sides (Fig. 4b). If you just turn the case on its back and lay the frame on top, you can use the tongues to mark where you want to cut the grooves. With the frame apart, it's easy to complete this.

CHAMFERS. The last thing to do before gluing up the frame is to rout the stopped chamfers, as shown in Fig. 5a. When you look closely, you'll see that the top and bottom end points of the chamfers are different. Also, the left and right sides are mirror images. Don't worry, this just means that you'll need to use a different set of "offset" reference marks on the fence for each stile (Fig. 5). After the chamfers are routed, the ends of the cuts need a little clean-up, as shown on page 23.

BACK FRAME. The back frame is the same thing all over again, except for the two lower plywood *panels (J)*.

CASE & FRAME ASSEMBLY. When both frames are complete, they can be glued to the case. I added one frame at a time, starting with the front frame so I could clamp through the drawer openings, as shown in Fig. 6. Then when the back frame was in place, I glued in the filler strips and sanded them flush.

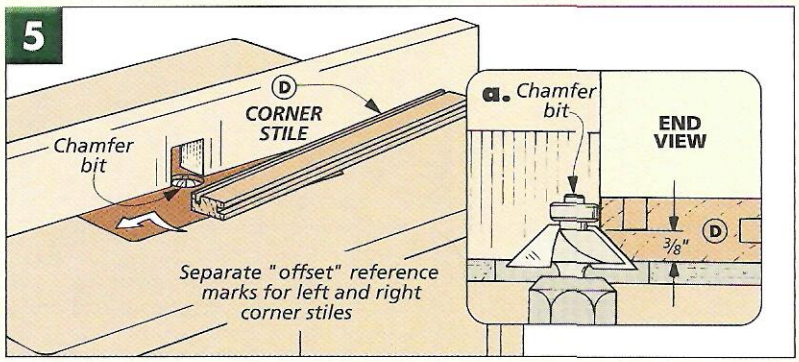

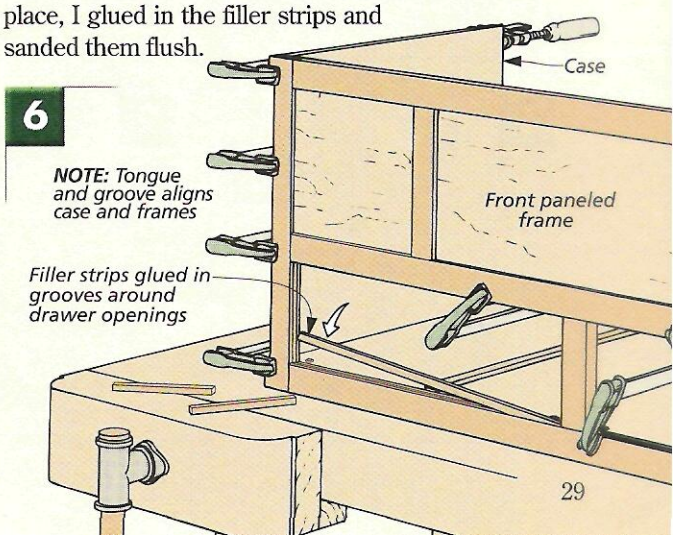

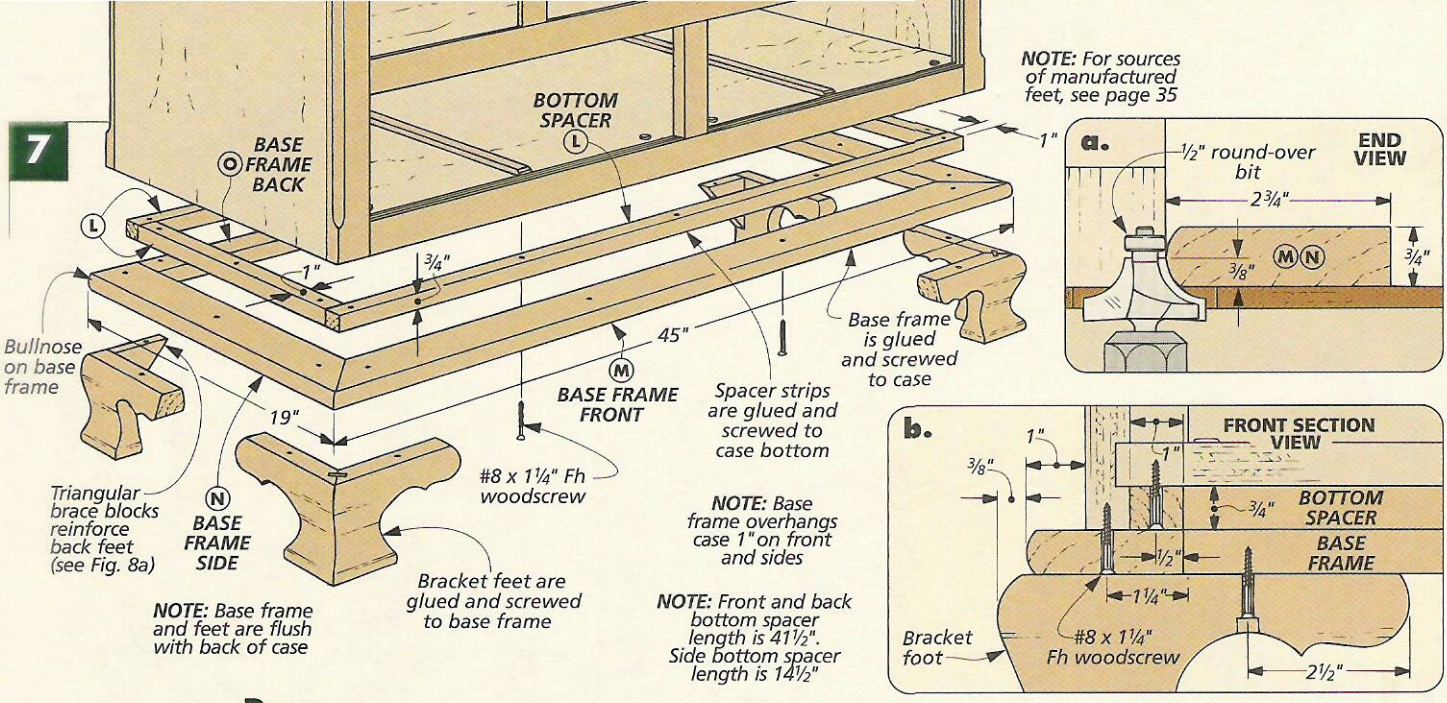

Base

With the case completed, I turned my attention to the lower part of the chest. This just involves making and installing some spacers, the base frame, and the bracket feet.

SPACERS. The first thing you want to do is add the *bottom spacers (L)* that help support the base frame. They're cut from 3/4"-thick stock and then glued and screwed to the bottom divider as shown in Fig. 7b.

BASE FRAME. Now the case is ready for the base frame. There's really not much to it. But as you can see in Figs. 7 and 7b, it does provide a solid "foundation" for the feet and adds another nice layer of detail.

To get started, I ripped blanks for the *base frame front (M), sides (N),* and *back (O)* to finished width from 3/4" stock. Then the front and two sides get "bullnosed" using a 1/2" round-over bit set to cut only 3/8" deep, as shown in Fig. 7a.

Now all there is to do is miter the front and two sides to fit. Figs. 7 and 7b show what you want — a 1" overhang on the front and sides and a flush fit at the back. Once this was done, it worked well for me to just glue and screw the pieces to the case one at a time, starting at the front. The back piece is added last.

BRACKET FEET. Now you can take on the "challenge" of the bracket feet. But you shouldn't be intimidated. It's not hard (see box below).

When the feet are completed, you just attach them with counterbored screws and glue. Fig. 7b shows how they fit — with the rounded part 3/8" proud of the base frame.

MAKING BRACKET FEET

The graceful bracket feet help give the chest its really distinctive look. And when you make them, you'll find it isn't nearly as hard as you might think. As the figures below show, there's no carving involved. I just used a table saw, a band saw, a block plane, and some sandpaper to shape them.

These are the same feet I used for the "Bedside Chest" in *Woodsmith* No. 139. This issue has step-by-step instructions on how to make bracket feet. Or if you have internet access, the article can be downloaded. If you want less of a challenge, check out the "ogee" base on page 34.

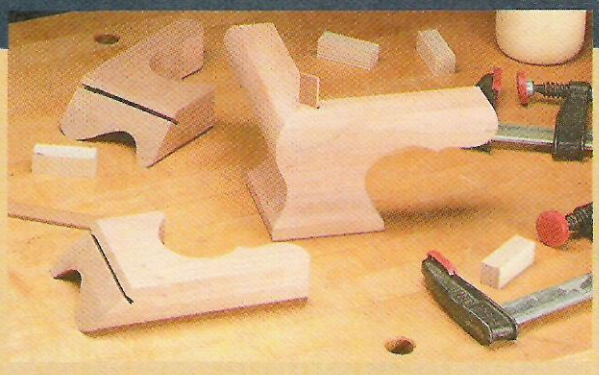

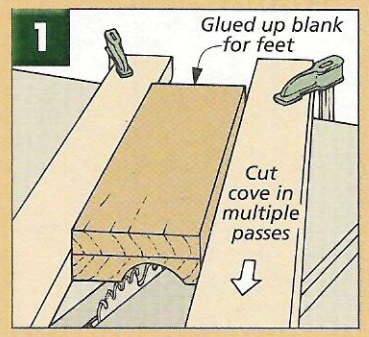

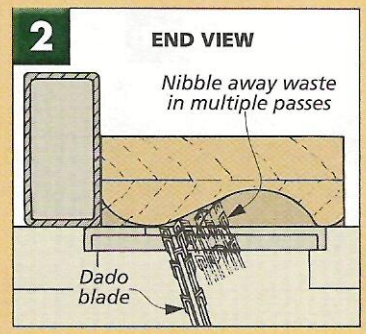

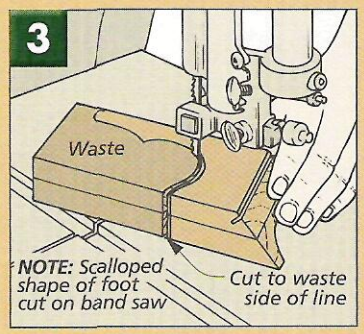

For a limited time, you can download a free pattern and a step-by-step article on how to make your own bracket feet at: woodsmith.com

Woodsmith GO ON-LINE EXTRAS

Moldings

With the base frame and feet added, the case is taking shape. Making and installing the moldings around the top, the bottom, and the front panels will really dress it up. These moldings look a bit complicated, but all you need to make them are a couple of "special profile" router bits and a little time at the router table.

CAP & BASE MOLDING. I decided to work on the *base molding (P)* and the *cap molding (Q)* first. Since the only real difference between the two moldings is their width, I could take a little shortcut. As you can see in Fig. 9a, I made both moldings together from a single blank.

You can get started by cutting a 3"-wide piece of 3/4"-thick stock to the length that you'll need. Then it's just a matter of routing the profile on both sides with shallow passes (Figs. 9 and 9a). To complete the moldings, just cut them to width on the table saw. (Note that it's safer to cut the narrow molding first.)

INSTALLATION. When I had the moldings in hand, I fit the base molding first. As Figs. 8 and 8a show, it's just mitered to fit around the front and sides — flush with the back — and then glued and nailed in place. (I like to use a brad nailer for this.)

Next comes the cap molding. Take a look at Fig. 8b to see how it fits — sitting on the top edge of the case and overhanging on both sides.

If you just think back to the base frame, you'll get the idea on the installation. When the pieces have been cut to fit, adding them one at a time makes it a pretty simple job. I just made sure the side pieces fit flush to the back edge of the case and all the pieces had an even 3/16" overhang on the inside (Fig. 8b). There's one last thing. The *cap back (R)* fits between the sides, overhanging only on the inside (Fig. 8d).

PANEL MOLDING. I added some panel molding to complement the drawer fronts. When you look at the box at right, you'll see it's not hard to make. But I took my time fitting it. It's one of the focal points of the chest, so you want it to look good. And with just glue to hold it, the fit needs to be tight (Fig. 8c).

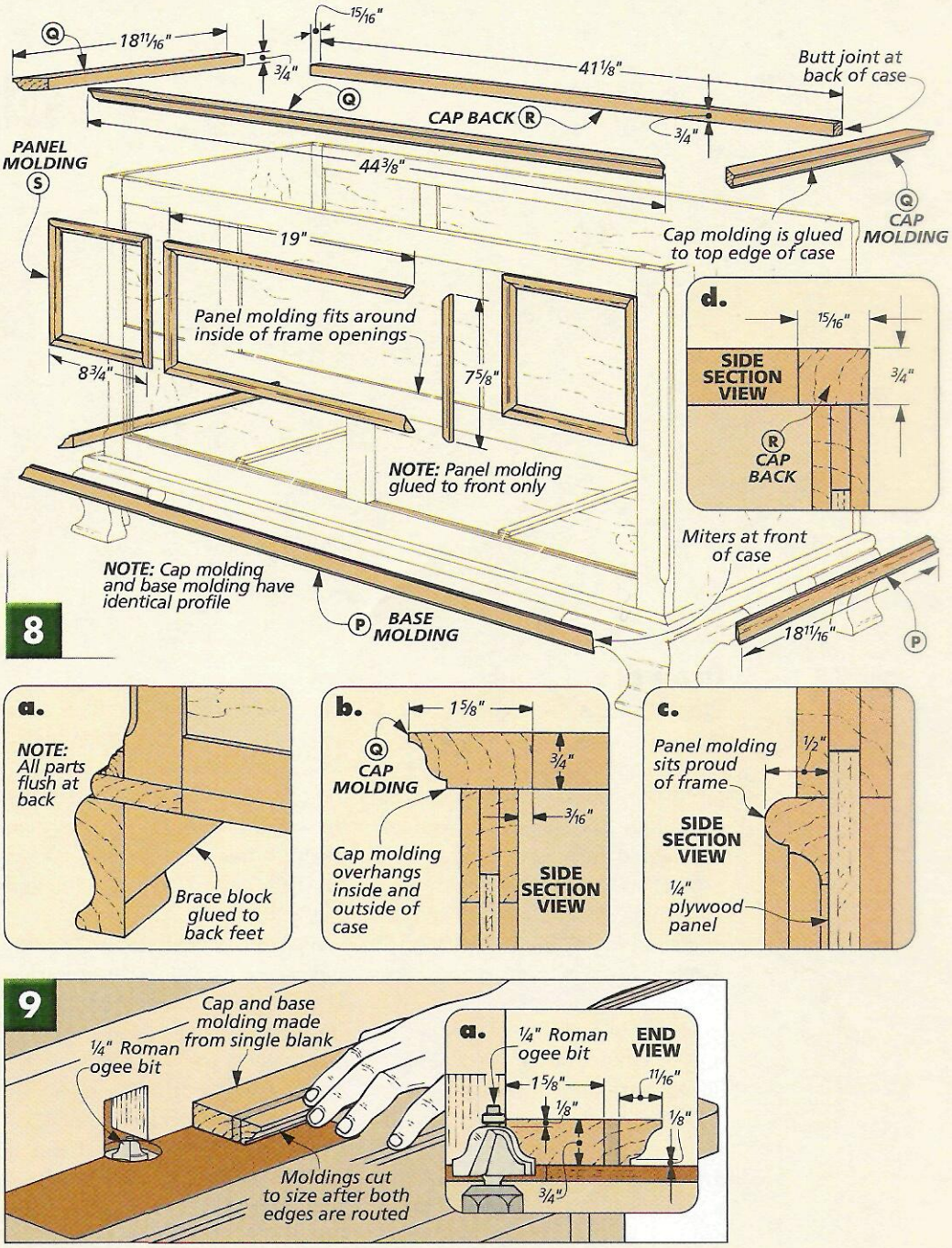

OGEE PANEL MOLDING

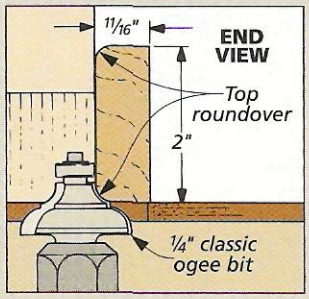

1 Set the bit low and hold the blank upright against the fence to rout the top roundovers of the molding.

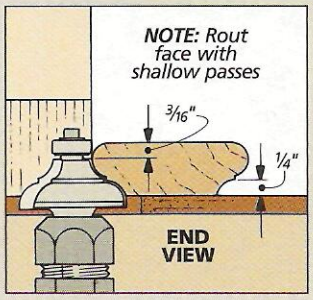

2 Now by raising the bit in steps, you can gradually rout the full face of the molding with shallow passes.

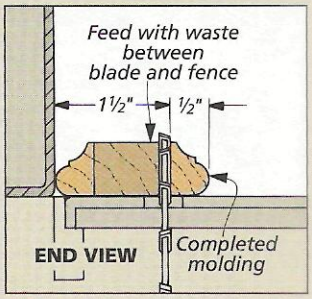

3 Finally, cut the molding to width on the table saw, with the waste between the blade and the fence.

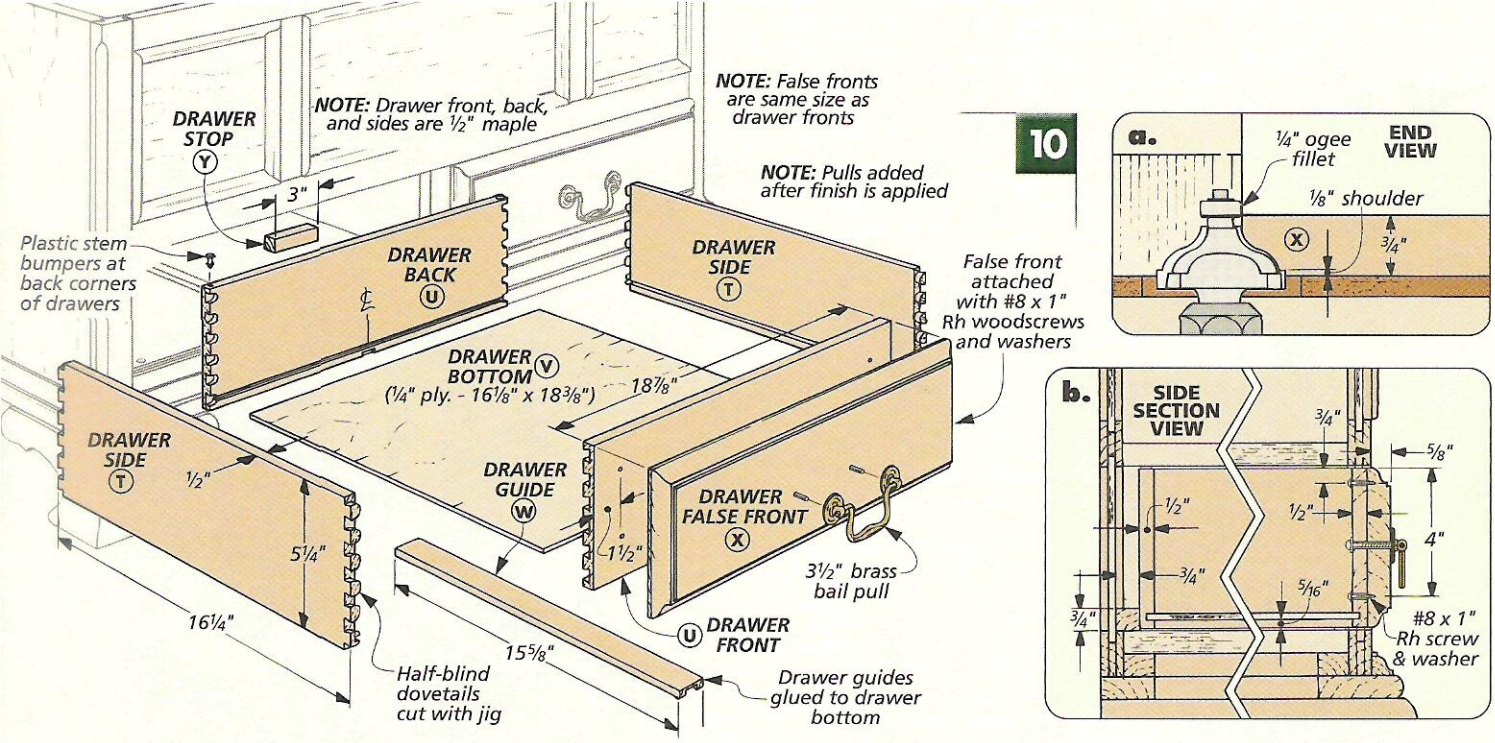

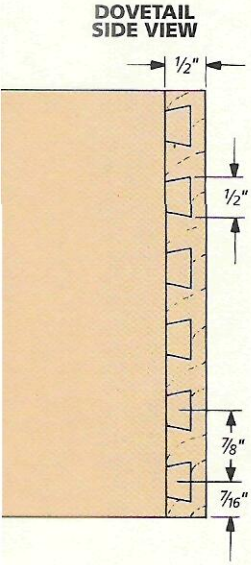

Drawers

When the case was completed, I decided to work on the drawers next. As you can see in Fig. 10, they're pretty standard. The only thing a little unique are the slotted guides attached to the bottoms (Fig. 12).

DOVETAILS. To start on the drawers, first cut the *drawer sides (T)* and the *fronts* and *backs (U)* to size from 1/2" maple. (I gave the drawers a 1/16" clearance on all sides.)

After I had all the pieces cut to size, I went to work on the half-blind dovetails with the dovetail jig.

Once the dovetails are routed, you can cut the grooves for the drawer bottoms. To keep the bottoms from rattling, I sized the grooves to the 1/4" plywood I was using. Also remember that you'll need to fit a 5/16"-thick guide underneath the bottoms (Fig. 12). Now I thought a little bit ahead and drilled the mounting holes for the false fronts. At this point all that's left is to cut the *bottoms (V)* to size and glue up the drawers.

GUIDES. The next step is to make and install the wood drawer guides. There's nothing difficult here, but you do want to take a little care with this so the drawers will slide easily.

I started by cutting the *guide (W)* blanks to width and length from 5/16" maple (Fig. 12). Next, you'll want to cut the centered groove carefully. A long push block makes this job a lot safer (Fig. 11). The goal is for the guides to slide easily on the runners but without too much play.

With the guides made, you'll still need to cut an oversized notch at the back of the drawers to make this "system" work (Fig. 12a). And then before they're fit, I also like to mark my drawers (left and right). Now you can use some carpet tape to hold the guides while you test the fit of the drawers in their openings.

FRONTS. After the guides are fit and glued in place, there're just a couple things left. The *false fronts (X)* need to be added to the drawers. But first they get a 1/4" ogee fillet (Fig. 10a).

Finally, add the *stops (Y)* and the stem bumpers (Fig. 10). The pulls are installed after the finish.

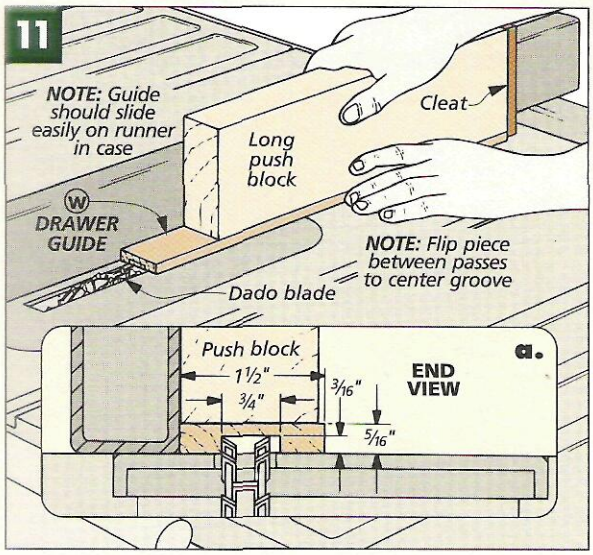

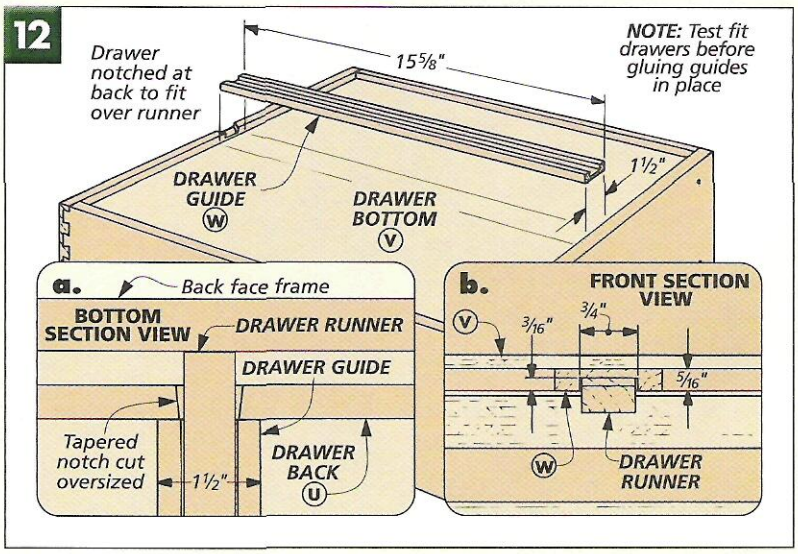

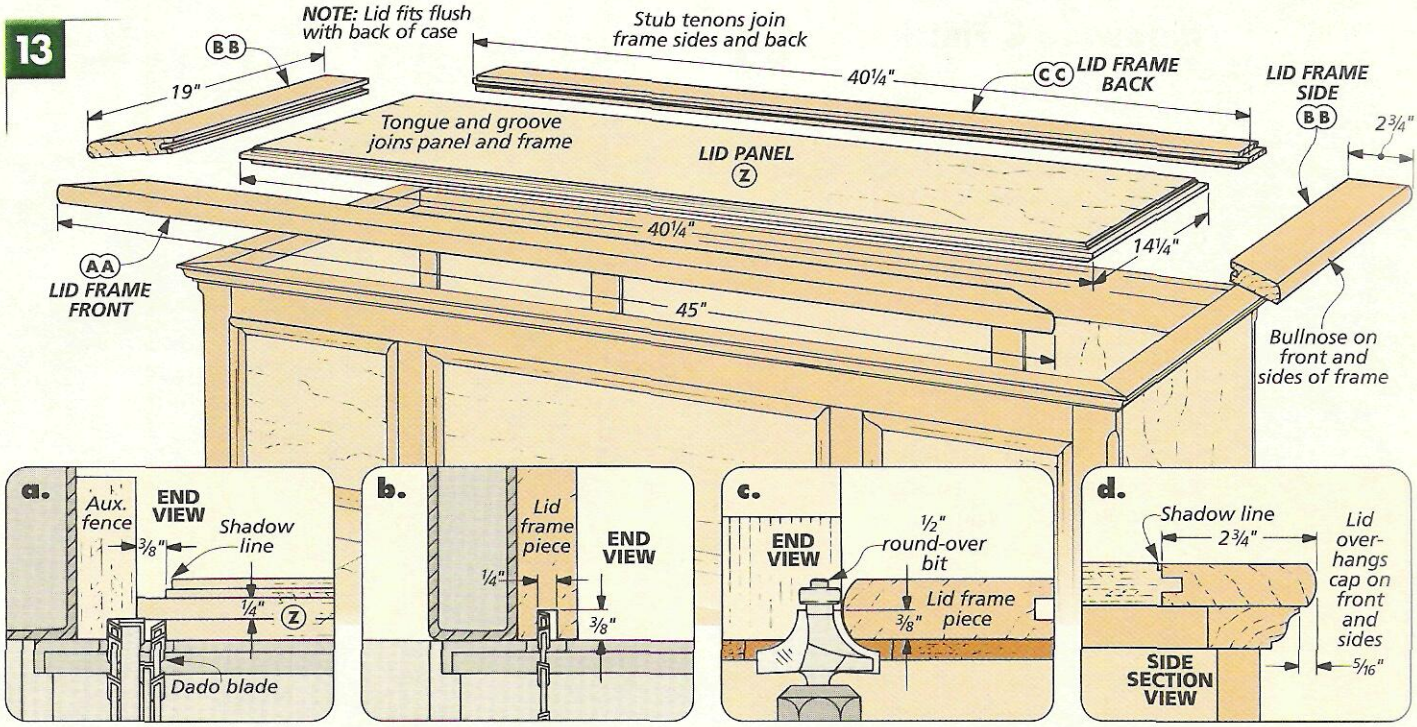

Lid

Building the lid will "top" off the chest. It's just a solid wood frame that captures a plywood panel with a simple tongue and groove joint. It's got a couple details you'll notice, a bullnose on the frame and a narrow shadow line around the panel (Fig. 13d).

PANEL. I started by cutting the center *lid panel (Z)* to size from ¾" plywood. All it requires is a few rabbets you can cut with a dado blade. First on the top face of the panel, cut the ⅛"-deep rabbet that creates the shadow line. And next you can create the centered ¼" tongue. Just take a look at Figs. 13a and 14a, and you'll see what you need to do here.

FRAME. The panel is now ready to be framed. First the *lid frame front (AA), sides (BB),* and *back (CC)* can be cut to size from ¾"-thick stock. (For this frame, they're all the same width.) Next, the pieces need a ¼" centered groove to match the tongue on the lid panel. By this point you know what to do here (Fig. 13b). Again, the important thing is to get a snug fit. When the grooves are cut, the pieces could be fit around the panel. But I wanted to rout the bullnose on the front and sides first. As you can see in Fig. 13c, it's just like the base frame.

FITTING THE FRAME. Fitting the frame to the panel isn't hard. And with the tongue and groove joint to support the frame, the job is a lot easier. But you want to do this carefully.

The front and sides are pretty straightforward. I just mitered them at the front to fit around the panel. But there's a little trick to fitting the stub-tenoned back piece. The first thing you want to do is clamp the side pieces in place on the panel and measure for the length of the back piece. (Just measure from bottom of groove to bottom of groove.)

With the back piece cut to size, you can fit the stub tenon in two steps. Start by sneaking up on the thickness of the tenon, leaving the length a little short. When it fits snug in the groove, you can sneak up on the length until you get a good tight fit between the sides.

GLUE-UP. Before you get into the glue up, there are a couple things to consider. The first is whether or not to stain the shadow line (see page 23). And the second is how to avoid having to clean glue squeeze-out from the shadow line. To prevent this, I just put glue in the groove and only on the bottom of the tongue.

HINGES. Now the mortises for the hinges can be cut, as in Fig. 15. And for some online tips for this procedure, see the box below right.

SAFETY NOTE

To avoid an accident, you may want to add vent holes in the back upper rail of the chest. See Sawdust on page 2 for more information.

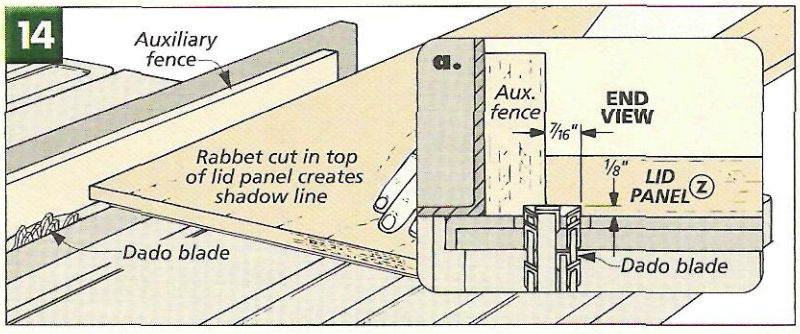

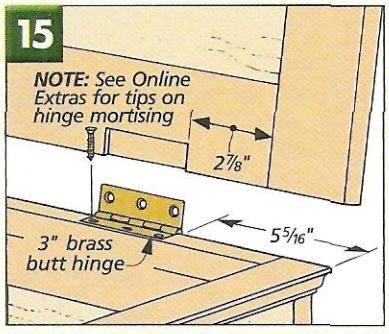

To download some helpful tips for cutting hinge mortises, go to: Woodsmith.com

Woodsmith GO ON-LINE EXTRAS

Hardware & Finish

Now you're in the homestretch. There are just a few more details.

CHEST LOCK. After the lid was hinged, I could fit the brass chest lock, as in Fig. 16. To do this, you'll need to do a little bit of mortising. Fig. 16a shows how the lock mechanism fits into the case. When the lock is in place, it can be used to position the "link" that's mortised into the lid. Adding the lock is discussed in the article starting on page 24. At this point, I did all the mortising, but I waited to install the lock until after the finish was applied.

LID CHAIN. The lid chain is an important item. It helps protects your hard work. Figs. 16 and 16b show where to position the chain brackets.

STAIN. Now after some final sanding, you're ready to apply a finish. But before you get ahead of yourself, you might want to think about using a stain. Normally I like the look of natural cherry. With just a clear finish, it gradually darkens to a nice, warm, reddish-brown color. But on my chest, I didn't have a very good color match between the plywood and the solid wood parts. So I decided to use a stain to blend everything together. I think it was worth the extra effort.

FINISH. I used one of my favorite finishes on the chest — *Hope's Tung Oil Varnish*. I like this product because even though you just wipe it on, it still has a good "build" with a nice sheen and provides plenty of protection. And it's very easy to apply. Just wipe on a full coat and then wipe off the excess. I let the chest dry overnight, sanded lightly, and gave it a second coat. Three coats are usually plenty.

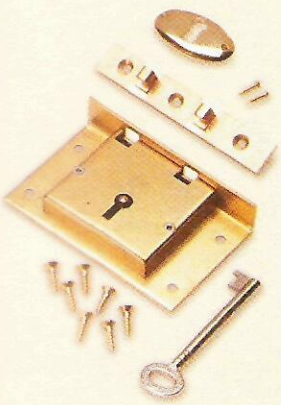

▲ *A 3½" solid brass chest lock is fit into the case and lid.*

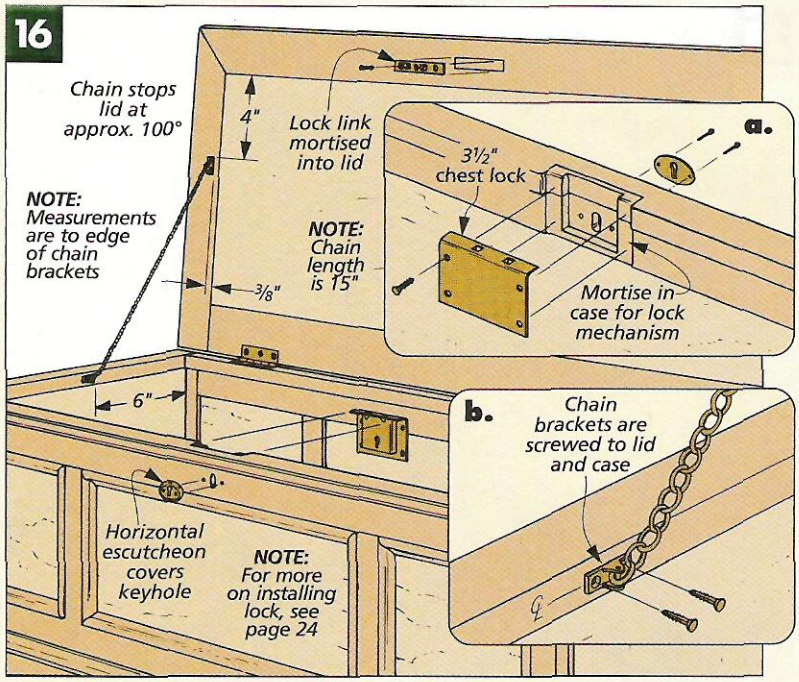

MATERIALS & SUPPLIES

A	Case Sides (2)	¾ ply. - 17¼ x 17½
B	Case Dividers (2)	¾ ply. - 16½ x 42
C	Drawer Runners (2)	½ x ¾ - 16½
D	Corner Stiles (4)	¾ x 1¾ - 17½
E	Bot./Mid./Upr. Rails (6)	¾ x 1½ - 40¼
F	Upper Stiles (4)	¾ x 1½ - 8⅜
G	Lower Stiles (2)	¾ x 1½ - 6⅛
H	Upr. Small Panels (4)	¼ ply. - 8⅜ x 9½
I	Upr. Mid. Panels (2)	¼ ply. - 8⅜ x 19¾
J	Lower Panels (2)	¼ ply. - 6⅛ x 19¾
K	Filler Strip	¼ x ⅜ - 100 ln. in.
L	Bottom Spacer	¾ x 1 - 120 ln. in.
M	Base Frame Frt. (1)	¾ x 2¾ - 45
N	Base Frame Sides (2)	¾ x 2¾ - 19
O	Base Frame Back (1)	¾ x 1¾ - 39½
P	Base Molding	¾ x 11/16 - 90 ln. in.
Q	Cap Molding	¾ x 1⅝ - 90 ln. in.
R	Cap Back (1)	¾ x 15/16 - 41⅛
S	Panel Molding	11/16 x ½ - 140 ln. in.
T	Drawer Sides (4)	½ x 5¼ - 16¼
U	Drawer Fronts/Backs (4)	½ x 5¼ - 18⅞
V	Drawer Bottoms (2)	¼ ply. - 16⅛ x 18⅜
W	Drawer Guides (2)	5/16 x 1½ - 15⅝
X	Drawer False Fronts (2)	¾ x 5¼ - 18⅞
Y	Drawer Stops (4)	¾ x ¾ - 3
Z	Lid Panel (1)	¾ ply. - 14¼ x 40¼
AA	Lid Frame Frt. (1)	¾ x 2¾ - 45
BB	Lid Frame Sides (2)	¾ x 2¾ - 19
CC	Lid Frame Back (1)	¾ x 2¾ - 40¼

- (1 set) Bracket Feet w/Braces
- (1 pr.) 3" Solid Brass Hinges w/Screws
- (1) 3½" Chest Lock w/Escutcheon
- (1) 15" Brass Chest Chain
- (2) 3½" Brass Bail Pulls
- (8) Plastic Stem Bumpers
- (38) #8 x 1¼" Fh Woodscrews
- (8) #8 x 1" Rh Woodscrews
- (8) #8 Washers

There are a number of Online Extras available for this blanket chest. For a limited time, you can download a free Cutting Diagram, step-by-step instructions and patterns for building the bracket feet, and information on the optional "ogee" base shown below. To see all of these extras, go to:
www.Woodsmith.com

Woodsmith GO ON-LINE EXTRAS

◀ *If you decide not to tackle the bracket feet, the "ogee" base, pictured at left, makes a nice alternative. It's a little simpler and still has a classic look.*

SOURCES

Paneled Blanket Chest

Before I started building the chest, I found some high-quality brass hardware. I bought mine by mail order, but you might find some of it locally.

CHEST LOCK & ESCUTCHEON. The 3½" chest lock might be the most difficult item to come by. I bought mine from *Lee Valley* (00P27.35), but *VanDyke's Restorers* carries a pretty similar lock. The escutcheon (01A1910) was ordered seperately from *Lee Valley*.

HINGES, PULLS, CHAIN & BUMPERS. The brass hinges, brass bail pulls, chain, and stem bumpers are all pretty standard items and are more commonly available. Several of the sources listed carry the same or similar items, but I ordered the pulls from *Rockler* (35402) to match those I used on the bedside chest in *Woodsmith* No.139.

BRACKET FEET. If you want to include bracket feet on your chest but don't want to make them, there are a couple sources for ready-made feet. Both *Rockler* and *Van Dyke's* carry bracket feet similar to those pictured in cherry and a couple other woods.

BEDSIDE CHEST PLANS. If you'd like to order the bedside chest plans from issue No. 139, they can be purchased on our web site, see box below.

Router Bits

All three of the projects in this issue require at least one "special profile" router bit that you might not own. The bits that I used were made by *Amana Tools*, but a number of other manufacturers make bits with the same or similar profiles. If you can't find these bits locally, some mail order sources are listed. Some of these bits can be pretty expensive, so you might shop around a little before you buy.

BLANKET CHEST & HEADBOARD. To build the blanket chest, I used three different profile bits. The cap and base molding were made with a ¼" Roman ogee bit (*Amana* #49206). (And the same bit is used for the caps and feet of the arch-top headboard.) On the panel molding I used a classical cove and bead bit (*Amana* #54130). And finally for the drawer fronts you'll need a ¼" ogee fillet (*Amana* #54114). Again this bit did double duty on the headboard molding and the panels.

BOOKENDS. For the bookend moldings I used a slightly smaller classical cove and bead bit (*Amana* #54132).

Bookends

With a few scraps of wood, some ¾" MDF, and a piece of veneer, you're about set to go on the bookends. But I did need a couple other items.

FAUX FINISH. The special finishes that I used on the bookends are a product called American Accents made by *Rust-Oleum*. It comes in a variety of different colors and "effects."

ANTI-SLIP TAPE. I used a self-adhesive non- slip tape made by *3M* on the bottoms of the bookends. You can find the non-slip tape and the *Rust-Oleum* finishes at hardware stores.

Online Extras

If you don't have internet access, you can have a copy of this issue's Online Extras mailed to you. Just send a self-addressed, stamped #10 envelope to:

Woodsmith No. 145
Online Extras
P. O. Box 842
Des Moines, IA 50304

Please specify whether you'd like the article and pattern for the bracket feet or the optional "ogee" base.

MAIL ORDER SOURCES

Similar project supplies may be ordered from the following companies

Amana Tool
800-445-0077
amanatool.com
Router bits

Lee Valley
800-871-8158
leevalley.com
Brass bail pulls, Brass hinges, Chest chain, Chest lock, Escutcheon & pins, Stem bumpers

Rockler
800-279-4441
rockler.com
Bracket feet, Brass bail pulls, Brass hinges, Router bits, Stem bumpers, Veneer

Van Dyke's Restorers
800-558-1234
vandykes.com
Bracket feet, Brass bail pulls, Brass hinges, Chest lock, Escutcheon & pins, Veneer

Woodsmith Store
800-835-5084
Router bits

Woodworker's Supply
800-645-9292
woodworker.com
Brass bail pulls, Brass hinges, Router bits, Veneer

WOODSMITH PROJECT SUPPLIES

To order back issues or a hardware kit from *Woodsmith Project Supplies*, please use our toll-free order line, see below. It's open Monday through Friday, from 8 AM to 5 PM Central Time. Before calling, please have your VISA, MasterCard, Discover, or American Express card ready.

If you would prefer to mail in an order, please call the toll-free phone number below for more information concerning shipping charges as well as any applicable sales tax.

1-800-444-7527

Woodsmith *on the web*

- "Online Extras" - Plans, Patterns, & More
- Over 100 Woodworking Tips Online
- Visit Our Readers' Project Photo Gallery
- Project Plans You Can Download
- Catalog of Project Kits, Tools, Jigs, & Plans
- Forums for Woodworking, Tools, & Classifieds
- Links to Other Woodworking Sites
- Order *Woodsmith* & *ShopNotes* Back Issues

www.woodsmith.com

Online Customer Service
Click on Subscriber Services at
www.woodsmith.com

- Access your account status
- Change your mailing or email address
- Pay your bill
- Renew your subscription
- Tell us if you've missed an issue
- Find out if your payment has been received

FINAL DETAILS

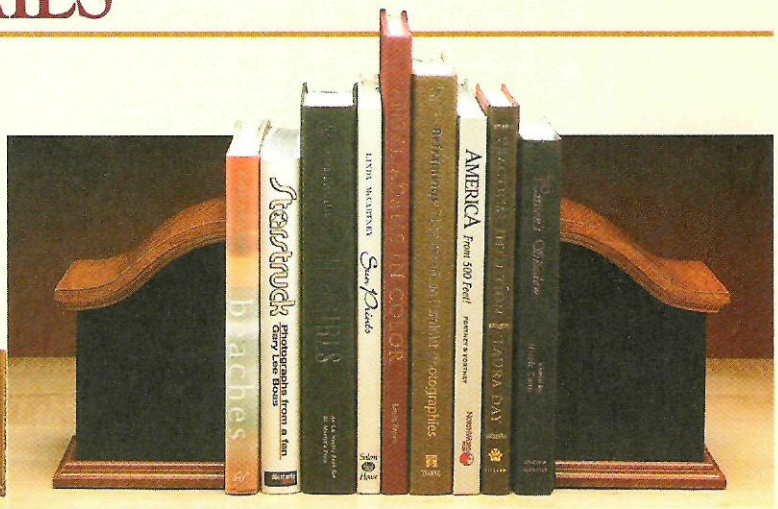

Arch-Top Bookends. ► *The curves on these bookends transform a simple project to one that's striking, and they're not hard to create. You'll find detailed instructions on page 18.*

◄ **Arch-Top Headboard.** *While this headboard is anything but ordinary, you'll find that its elegant arch-top molding and raised panels are surprisingly straightforward to build. Easy-to-follow instructions begin on page 6. And the technique for the arch-top molding starts on page 16.*

Blanket Chest. ► *The construction of this heirloom chest is pretty basic, but details like the bracket feet, the panel molding, and a half-mortise lock really set it apart. Complete plans begin on page 26.*

ONLINE EXTRAS

Woodsmith

ARCH-TOP HEADBOARD

MATERIALS

A	Post Faces (4)	¾ x 3½ - 54 rgh.
B	Post Sides (4)	1 x 2¾ - 54 rgh.
C	Filler Strips	½ x ½ - 32 rgh.
D	Ogee Trim Plates (6)	¾ x 5 - 5
E	Bullnose Trim Plates (4)	¾ x 5⅝ - 5⅝
F	Top Rail (1)	1 x 12 rgh. - 56
G	Bottom Rail (1)	1 x 8 - 56
H	Molding (1)	1 x 7⅜ rgh. - 56
I	Outer Stiles (2)	1 x 3 - 24½
J	Splines	½ x 1 - 32 ln. ft.
K	Inner Stiles (2)	1 x 3½ - 30 rgh.
L	Center Panel (1)	¾ x 24 - 31 rgh.
M	Outer Panels (2)	¾ x 11 - 28 rgh.
N	Back Panel (1)	¼ ply. - 30 x 51

CUTTING DIAGRAM

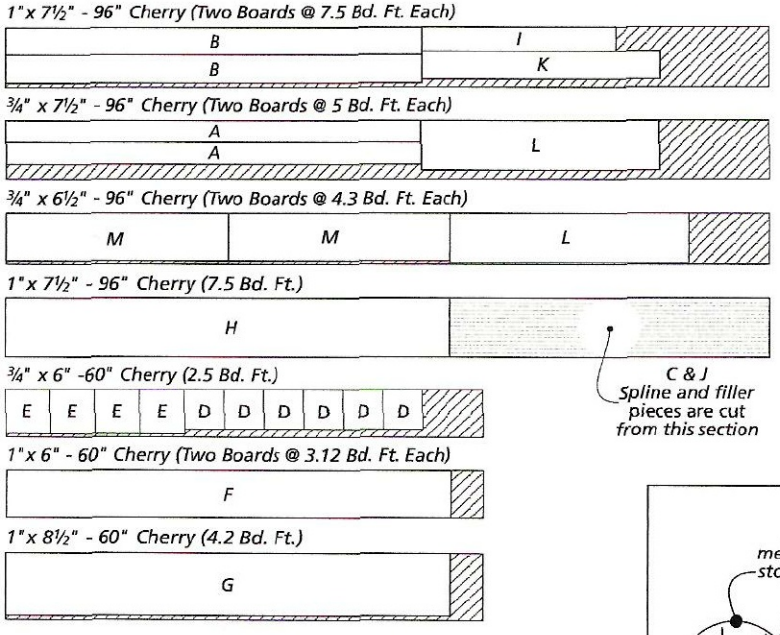

SUPPLIES

- (16) #8 x 2½" Fh Woodscrews
- (40) #8 x 1" Rh Woodscrews
- (16) #6 x ½" Rh Woodscrews
- (4) ¼"-20 Threaded Inserts
- (4) ¼"-20 x 1" Hex Head Screws
- (4) ¼" Washers

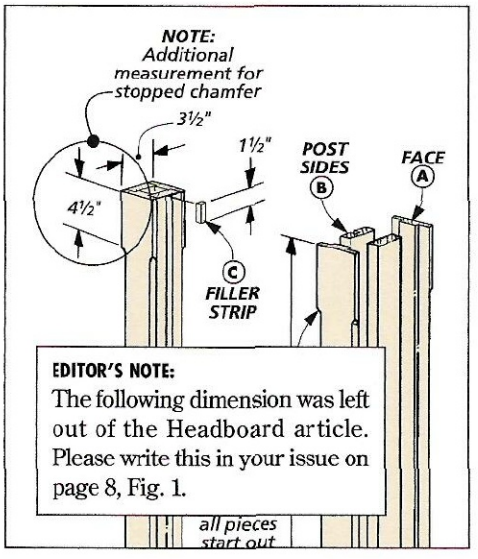

EDITOR'S NOTE:
The following dimension was left out of the Headboard article. Please write this in your issue on page 8, Fig. 1.

©2003 August Home Publishing. All rights reserved.

BRACKET FEET

Bracket feet have just the right combination of strength and elegance. The thick blocks provide plenty of support for a project like the blanket chest in *Woodsmith* No. 145. But the graceful contours of the faces and the curves of the scalloped profiles keep the feet from looking too heavy. All in all, they're pretty impressive.

On the other hand, if you've never made bracket feet, it's easy to be a bit intimidated by all these curves. Don't be. They don't require nearly as much handwork as you might expect — most of the shaping is done at the table saw and band saw.

FROM ROUGH TO READY. Bracket feet start out as 1½"-thick blanks. But as you can see in the margin, I glue two ¾"-thick pieces together, so I don't have to buy 1½"-thick stock. The blanks are then cut oversized (4½" x 16"), so the two halves of each foot can be cut from one blank.

All of the work of shaping the face profile is done while the blanks are oversized. Then they'll be cut in half and mitered, and the curved scallop will be cut (see the pattern on the next page). Finally the halves of each front foot will be glued together.

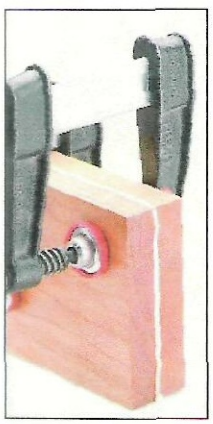

▲ *Bracket feet look like they were cut from thick blocks of wood, but these blanks were made with two pieces of ¾"-thick stock.*

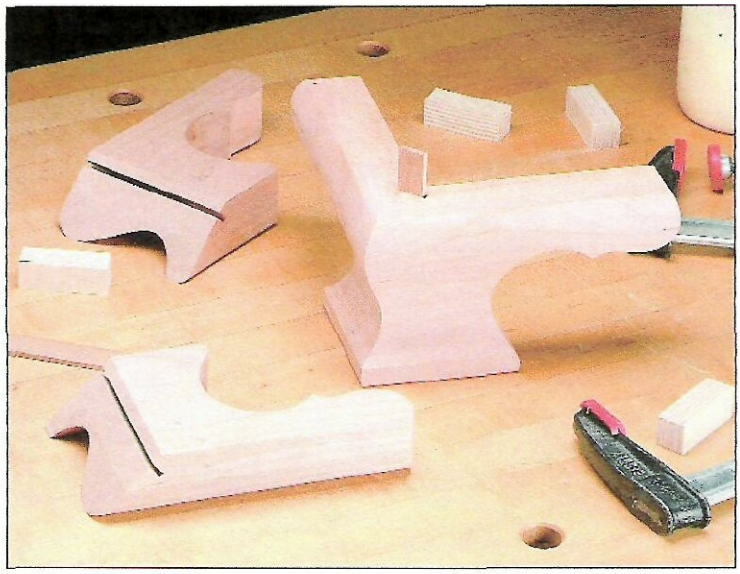

Roughing Out the Face Profile

With the blanks in hand, you're ready to create the S-shaped profile on the face of each blank. All the rough work for this is done at the table saw, starting with a simple cove (Steps 1-3).

COVE SET-UP. A cove is cut by pushing a board across the table saw at an angle, guided by a pair of wood fences. If you've never cut a cove before, don't worry. Steps 1 and 2 will show you exactly how to set up your table saw. And cutting the cove is done in multiple passes, "nibbling" away only 1/16" of material with each pass (Step 3).

To find the correct angle of the fences, I first mark the entry and exit points of the blade when it's raised to its full height, which is ⅝" for this cove (Step 1). Then I make a posterboard "frame" (with a 1¾"-wide opening and a ¾" border) and

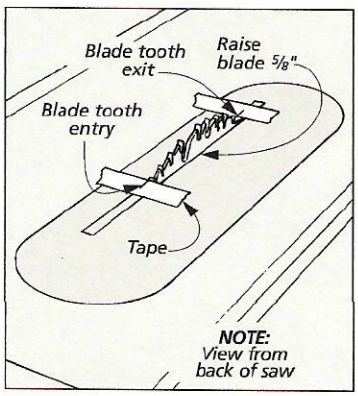

1 *To begin, raise the blade to the final depth of the cove (⅝"). Then using tape, mark where the teeth of the blade enter and exit the table.*

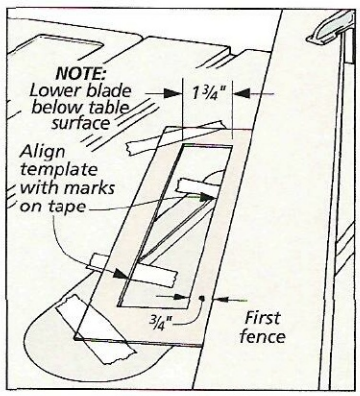

2 *Next, make a template with a 1¾" inside window (the cove's final width). Then angle the template so the long edges touch the marks.*

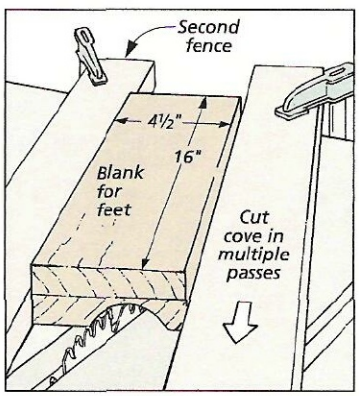

3 *With both fences in place, set the blade 1/16" high and make a pass. Raise blade in 1/16" increments and repeat until cove is ⅝" deep.*

 ©2003 August Home Publishing. All rights reserved.

angle it until it touches the entry and exit points (Step 2). Now the first fence can be clamped in place.

To position the second fence, simply clamp it to the table with one of the blanks sandwiched in between. (The blank should slide smoothly.)

CUT COVE. At this point, you're ready to cut the coves (Step 3). Start with the blade set 1/16" above the table, and don't remove any more than 1/16" in one pass. Stop when the cove is at its full height (5/8").

MAKE TEMPLATE. Now before you do any more shaping, it's a good idea to make a template. (As you can see in the photo below, I made mine out of hardboard.) The pattern below is the only one you need for the feet. The curve on the end will help you create the face profile. (The scalloped profile will be cut later.)

With your template in hand, set it on the ends of each blank and align it with the cove. Then trace around the template, as shown in the photo below. Now you've got a good guide for what the profile will look like and where to remove the waste.

FINISHED WIDTH. The next step is to begin removing the waste by trimming the edges of the blanks (Step 4). With the profile already drawn on the ends, all you need to do is set the fence so the blade aligns with the profile lines. (You'll end up trimming about 1/4" or so from each edge.)

COMPLETE COVE. Now you're ready to elongate one edge of the cove. You could do this with a rasp or a file, but I removed most of the waste much quicker with a 1/2"-wide stacked dado set, as you can see in Step 5.

To remove the waste, you'll need to adjust both the angle and the height of the blade, but there aren't any hard and fast dimensions to work with here. The best way to set up the saw is to crouch behind the saw and eye down the saw blade (with the blank behind the blade so you can see the profile.)

Don't attempt to cut right to the line. The idea is just to get close enough so the final shaping doesn't take a lot of time (or effort). And be ready to make several passes, resetting the fence and the angle of the blade with each pass.

ROUNDOVER. After the cove is completed, the roundover located on the top, outside corner can be roughed out. Again I used the table saw to remove much of the waste, but this time, I used a regular saw blade tilted 45°, as shown in Step 6.

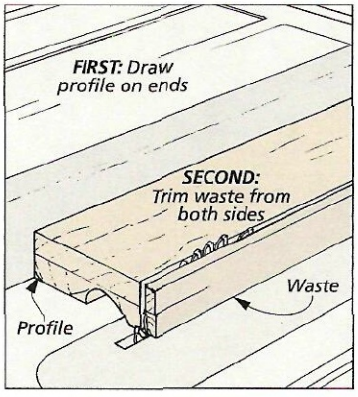

4 *With the profile laid out on the ends of each blank (see photo below), rip them to final width (4"), trimming waste from each edge.*

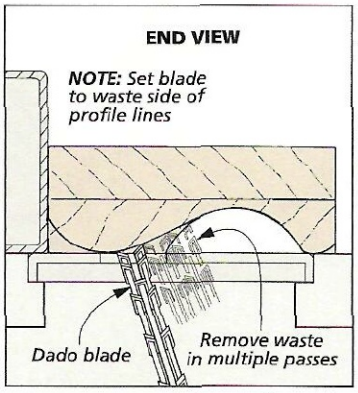

5 *Next, extend shape of cove by removing waste with dado blade set at angle. Adjust rip fence and dado blade between passes as needed.*

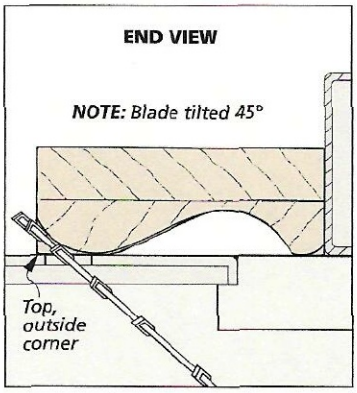

6 *Now the top, outside corner of each blank can be trimmed. To do this, tilt a regular saw blade 45°. Then sneak up on the final layout line.*

Bracket Foot Pattern

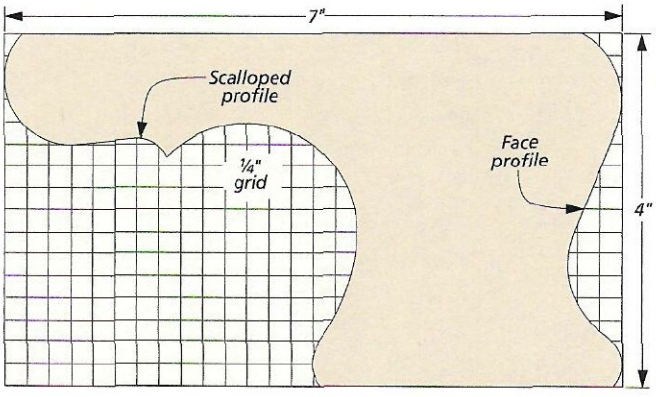

NOTE: *See full size pattern on last page of this article.*

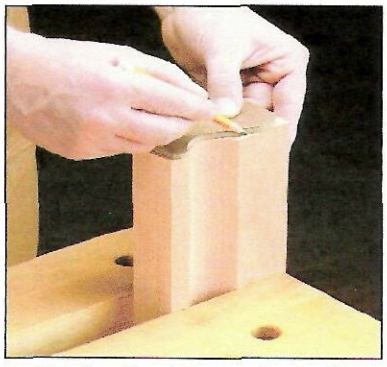

▲ *Hardboard makes a good, reusable template for the bracket feet profiles, see pattern at left. To position the template on the blank, just line it up with the cove you've already cut.*

©2003 August Home Publishing. All rights reserved.

Face Profile: Clean-Up

Up to this point, all the work at the table saw has been to get the face of the blanks to rough shape. Now it's time to clean up all the unwanted shoulder lines and saw marks left by the saw blade so that you end up with a smooth curve on the face profile.

This is where the handwork of making bracket feet comes in, and you'll find there's really not much to it. Each blank only has a little material left to remove, and the profiles drawn on the ends will guide you. But don't be too critical. The bracket feet end up far enough apart so that no one will notice if the profiles aren't exactly identical.

OUTSIDE CURVES. The areas that need the most shaping are the outside (convex) curves at the top and bottom of the feet. I shaped them with a block plane set to take a thin shaving, as shown in Step 7. (But you can also get the job done with a rasp or a Surform-type plane, which looks like a block plane but works like a rasp.) Start by smoothing out the noticeable shoulders. Then simply keep taking thin shavings, following the profile drawn on the end.

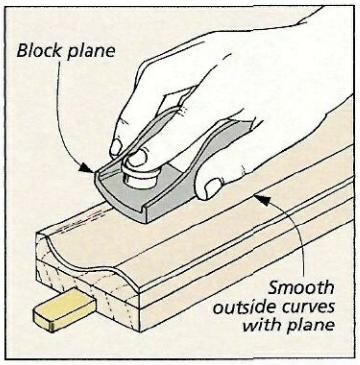

7 *On the blank's outside curves, plane any hard lines, removing enough waste to create a gentle curve that matches the layout on the ends.*

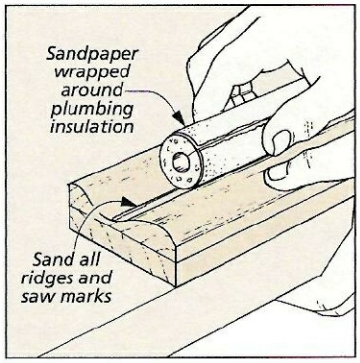

8 *Once the ridges have been planed away, smooth out the curve using a piece of sandpaper wrapped around a short length of plumbing insulation.*

INSIDE CURVES. The inside curves are even easier. All you need to do is sand or scrape them (Step 8). I wrapped sandpaper around a length of plumbing insulation. It provides just enough support *and* flexibility to sand the curve efficiently.

Miter & Spline Joint

Now that the profile of each blank is complete, they can be cut into individual pieces and one end of each *front* foot piece can be mitered.

LABEL BLANKS. But before you get started, it's a good idea to label the pieces, as shown in the drawing below. For each front foot, you want to glue the ends you cut apart back together — this time joining them with splined miters.

There are two reasons for doing it this way. For one thing, the grain on the faces of the halves will match up and "wrap around" the foot. Plus, since you have already done the final shaping, this technique will ensure the profile of the pieces match as closely as possible. (You may still need to do some light sanding after they're glued together.)

MITER FRONT PIECES. With the parts labeled and cut apart, the next step is to miter one end of each front foot piece, as shown in Step 9. The nice thing here is you don't have to worry about an exact length. That will be taken care of when you create the scallop profile later. But I still added a stop block to the auxiliary miter gauge fence so the piece wouldn't shift as it was being pushed across the blade.

After mitering the pieces, I lowered the blade and repositioned the stop block to cut a kerf for a spline (Step 10). These splines are added mostly to keep the pieces aligned when you glue them together.

BACK FEET. Because a project like the blanket chest is usually against a bed or wall, only the front feet are mitered. The back feet are simply supported with a small triangular brace in back (refer to Step 17).

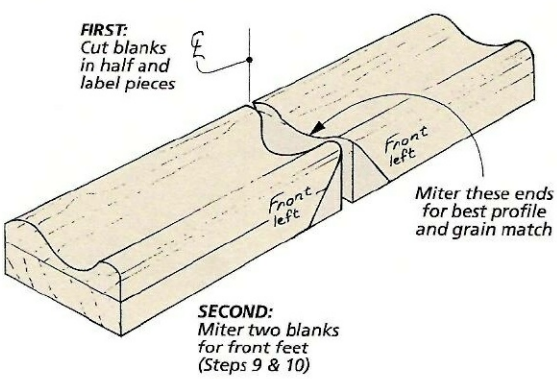

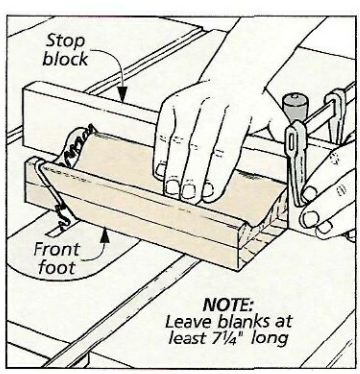

9 *With the profile complete, cut all the blanks in half. (See drawing at left.) Then miter the four pieces that will be used for the front feet.*

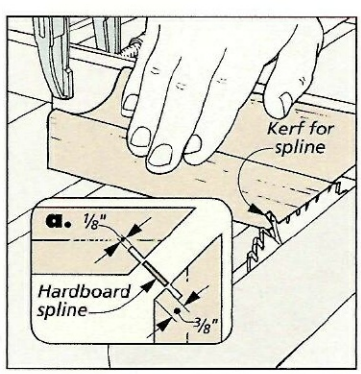

10 *Now cut a ⅜"-deep kerf in each mitered end for a spline to help align the pieces. Then cut a ⅛" hardboard spline to fit in the kerf.*

 ©2003 August Home Publishing. All rights reserved.

Scalloped Profile

Before you can glue the feet together, there's still one more profile to cut. It's cut on the end of the blank (instead of on the face), and the work is done at the band saw and drill press (instead of the table saw). But the first thing to do is lay out the profile.

LAY OUT PROFILES. You've already made the template for this curve, refer to the pattern on page 2. But this time, the front and back legs are slightly different. The front feet are 7" long overall (Step 11), while the back feet are only 6½" (Step 12). For both feet, I laid out a line across the back side of each blank and then aligned the template with this line.

With the back feet, the thing to keep in mind is that they're *not* identical. With their contoured faces, they're mirrored images of each other, so make sure you end up with both a right and a left back foot.

SHAPE PROFILE. These profiles are easier to create than the face profiles. I roughed out the profile at the band saw (Step 13). Then I sanded as much as possible with a drum sander (Step 14) before finishing them with a little hand sanding.

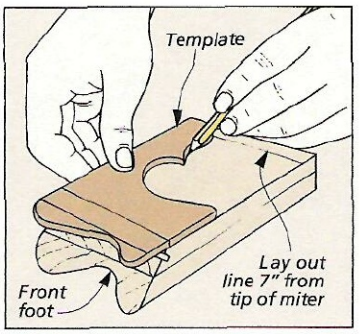

11 *Transfer scalloped part of the pattern onto back side of the mitered pieces. Position the template so the feet will end up 7" long.*

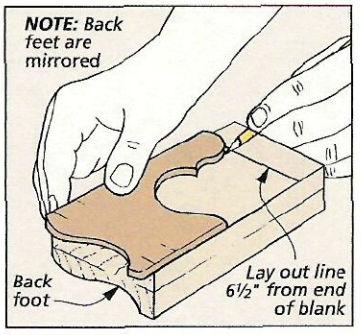

12 *Lay out scallop on each back foot blank so it will end up 6½" long. Flip template for second foot so back pieces are mirrored.*

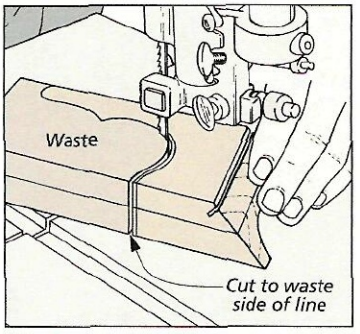

13 *Cut out scalloped shape on both the front and back feet using the band saw, staying to the waste side of the layout line.*

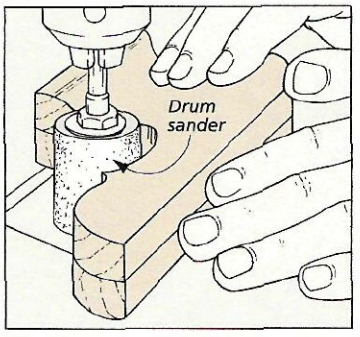

14 *To complete the shaping of each foot, sand the scalloped profile to the layout lines, using a drum sander in the drill press.*

Foot Assembly

Now that the profiles are complete, the feet are ready to be assembled.

FRONT FEET. To join the halves of the front feet, I wanted to use clamps, but there's no good place to position them. So I glued small clamping blocks to the top and bottom edges parallel with the mitered end. And to make sure I could remove them easily, I used plywood for the blocks and liquid hide glue to attach them, as shown in the margin photo. The plywood can be split fairly easily between the bottom two plies, and then by applying a little hot water to the plywood, you can loosen the bond of the hide glue. Then the foot can be scraped clean, and the spline can be trimmed flush.

BACK FEET. To provide plenty of suppor for the back feet, I cut small triangular braces and glued and screwed them to the back of the feet, as shown in Step 17 below. W

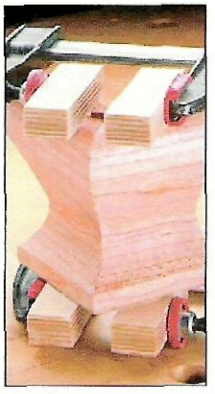

▲ *These clamping blocks are plywood so they'll split easily along the plies. And they're glued in place with hide glue, which can be loosened with a little hot water.*

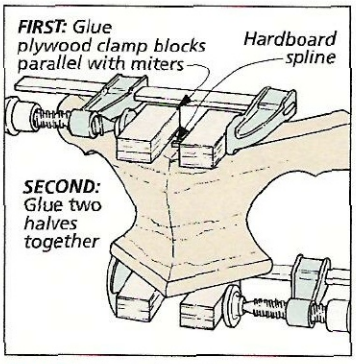

15 *Using hide glue, attach clamping blocks to the pieces parallel to the mitered ends (see margin). Then glue halves together.*

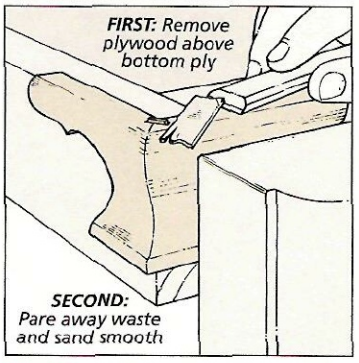

16 *To remove clamping blocks, pry away at bottom ply. Then loosen glue with hot water, pare away ply with chisel, and sand smooth.*

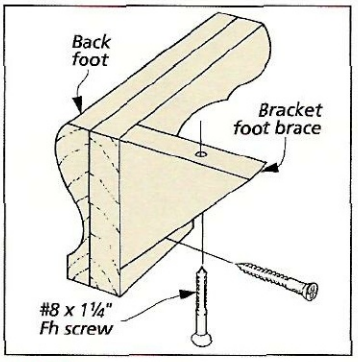

17 *For back foot, make a brace and drill counterbored shank holes. (Use handscrew to hold brace.) Then glue and screw to foot.*

©2003 August Home Publishing. All rights reserved.

Bracket Foot Pattern

Woodsmith No.139 - Bedside Chest

No. 145 - Paneled Blanket Chest

Copyright 2003, August Home Publishing Company. All Rights Reserved.

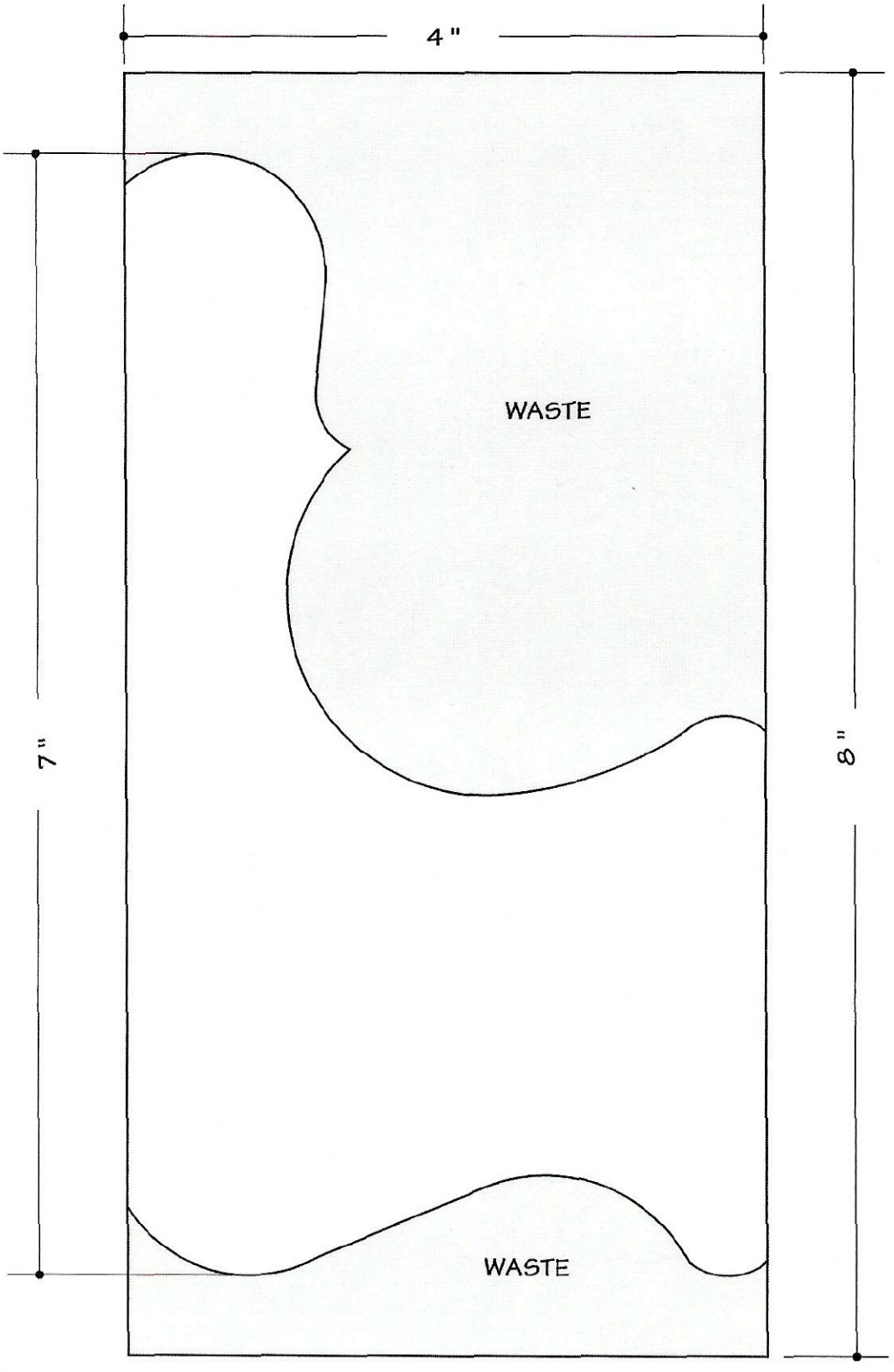

ONLINE EXTRAS

Woodsmith

PANELED BLANKET CHEST

MATERIALS

A	Case Sides (2)	3/4 ply. - 17 1/4 x 17 1/2
B	Case Dividers (2)	3/4 ply. - 16 1/2 x 42
C	Drawer Runners (2)	1/2 x 3/4 - 16 1/2
D	Corner Stiles (4)	3/4 x 1 3/4 - 17 1/2
E	Bot./Mid./Upr. Rails (6)	3/4 x 1 1/2 - 40 1/4
F	Upper Stiles (4)	3/4 x 1 1/2 - 8 3/8
G	Lower Stiles (2)	3/4 x 1 1/2 - 6 1/8
H	Upr. Small Panels (4)	1/4 ply. - 8 3/8 x 9 1/2
I	Upr. Mid. Panels (2)	1/4 ply. - 8 3/8 x 19 3/4
J	Lower Panels (2)	1/4 ply. - 6 1/8 x 19 3/4
K	Filler Strip	1/4 x 3/8 - 100 In. in.
L	Bottom Spacer	3/4 x 1 - 120 In. in.
M	Base Frame Frt. (1)	3/4 x 2 3/4 - 45
N	Base Frame Sides (2)	3/4 x 2 3/4 - 19
O	Base Frame Back (1)	3/4 x 1 3/4 - 39 1/2
P	Base Molding	3/4 x 11/16 - 90 In. in.
Q	Cap Molding	3/4 x 1 5/8 - 90 In. in.
R	Cap Back (1)	3/4 x 15/16 - 41 1/8
S	Panel Molding	11/16 x 1/2 - 140 In. in.
T	Drawer Sides (4)	1/2 x 5 1/4 - 16 1/4
U	Drawer Fronts/Backs (4)	1/2 x 5 1/4 - 18 7/8
V	Drawer Bottoms (2)	1/4 ply. - 16 1/8 x 18 3/8
W	Drawer Guides (2)	5/16 x 1 1/2 - 15 5/8
X	Drawer False Fronts (2)	3/4 x 5 1/4 - 18 7/8
Y	Drawer Stops (4)	3/4 x 3/4 - 3
Z	Lid Panel (1)	3/4 ply. - 14 1/4 x 40 1/4
AA	Lid Frame Frt. (1)	3/4 x 2 3/4 - 45
BB	Lid Frame Sides (2)	3/4 x 2 3/4 - 19
CC	Lid Frame Back (1)	3/4 x 2 3/4 - 40 1/4

HARDWOOD CUTTING DIAGRAM

3/4" x 7" - 96" Cherry (4.7 bd. ft.)

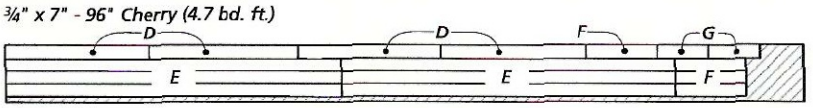

3/4" x 7" - 96" Cherry (4.7 bd. ft.)

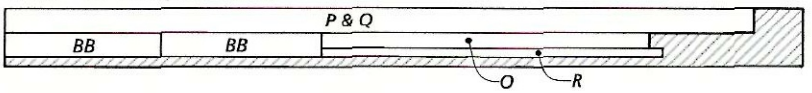

3/4" x 7" - 96" Cherry (4.7 bd. ft.)

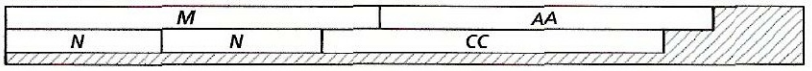

3/4" x 7" - 72" Cherry (3.5 bd. ft.)

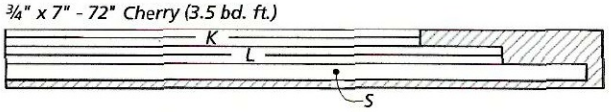

3/4" x 7" - 48" Cherry (2.4 bd. ft.)

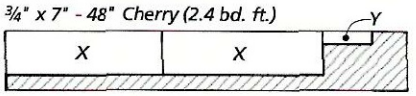

1/2" x 7" - 96" Maple (4.7 sq. ft.)

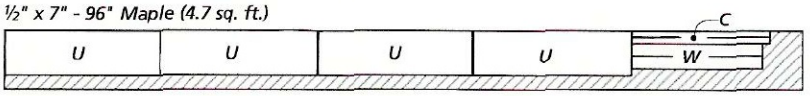

1/2" x 7" - 72" Maple (3.5 sq. ft.)

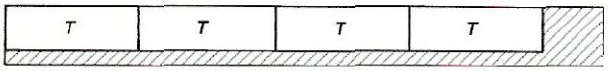

©2003 August Home Publishing. All rights reserved.

PLYWOOD CUTTING DIAGRAM

48" x 96" - ¾" plywood

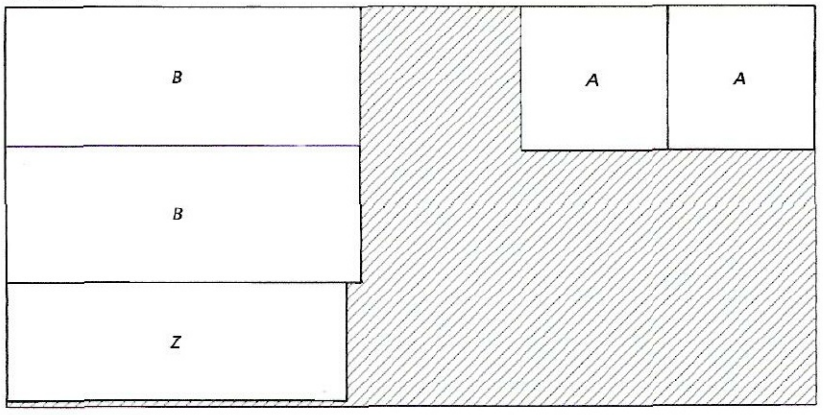

NOTE:
Cut parts "A" 17½" long (with the grain) and 17¼" wide (across the grain)

48" x 48" - ¼" plywood

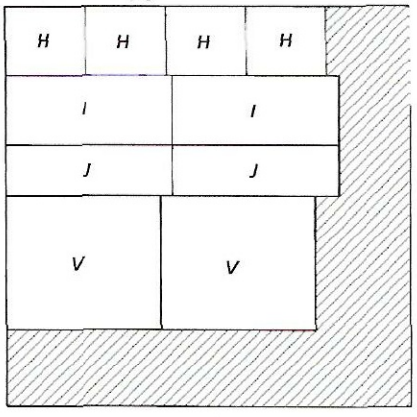

SUPPLIES

- (1 set) Bracket Feet w/Braces
- (1 pr.) 3" Solid Brass Hinges w/Screws
- (1) 3½" Chest Lock w/Escutcheon
- (1) 15" Brass Chest Chain
- (2) 3½" Brass Bail Pulls
- (8) Plastic Stem Bumpers
- (38) #8 x 1¼" Fh Woodscrews
- (8) #8 x 1" Rh Woodscrews
- (8) #8 Washers

©2003 August Home Publishing. All rights reserved.

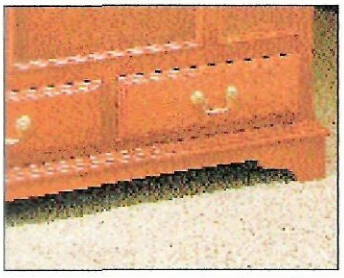

Optional Base

The bracket feet that I put on the blanket chest are really distinctive, but this simpler, "ogee" base makes a great alternative. It's just a mitered frame that's set in 5/16" from the edges of the bullnose base frame. (The ogee base should line up with the base molding above.)

After the pieces are mitered, I cut kerfs and splines that will reinforce the joint. Then the profile shown in Fig. 1a can be cut and smoothed. This isn't hard, but work carefully so you end up with clean, smooth lines.

Before attaching the frame, you'll need to add some mounting cleats to the front and sides of the base frame. And two triangular brace blocks reinforce the base frame at the back. W

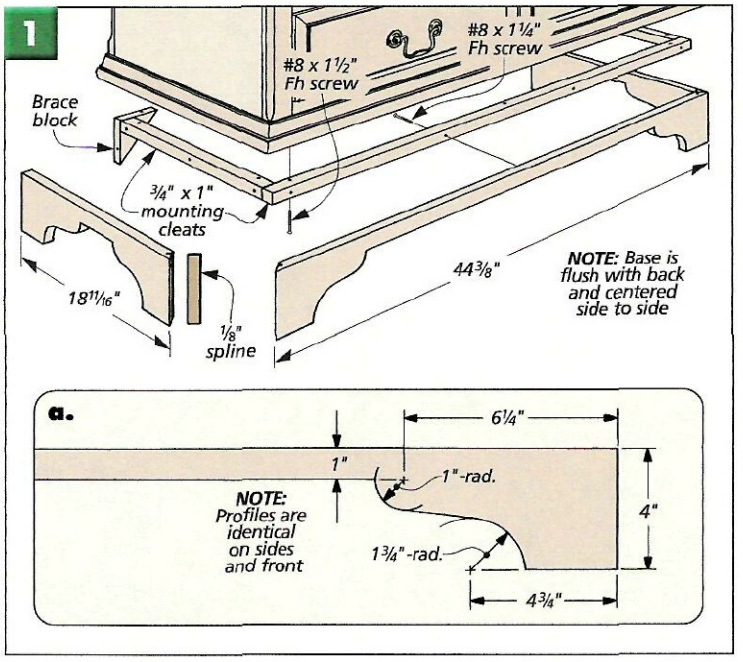

Mortising Chest Hinges

There's no big secret to mortising butt hinges. I've found that all it takes is a little know-how and a dose of patience. And like any job, I like to use any shortcuts that are available.

LAYOUT. For the blanket chest in issue No. 145, I started with the case. The first step here is to lay out the mortise. Once you've marked the position of the hinge, just set it in place and score around it with a sharp utility knife, as in Fig. 1. The sharp cuts are easy to see and will give you a head start when it's time to clean out the mortise. (Remember that the barrel of the hinge should sit proud of the case, as shown in Fig. 2a.)

ROUTER SHORTCUT. Now you could start chopping out the mortise with a sharp chisel, but I like to use a small hand-held router with a straight bit to rough out the mortise. (I used a 3/8"-dia. bit.) This method gives you a smooth bottom and a consistent depth and just makes the job a little easier.

But there are a couple simple tricks to this method. First you need to set the router bit to cut to the right depth. Fig. 2a. shows what you're after here — the same depth mortise in the lid and the case. I just measured the thickness of the hinge barrel and then split the difference, subtracting a little (1/32") so I'd end up with clearance between the lid and the case.

Next, to safely use a router on the narrow edge of the case, you'll need a little help. As you can see in Fig. 2, I used a 2x4 block clamped flush with the top edge of the case to give the router base more surface to ride on. (A rabbet in the block just provides clearance to start the cut.)

Once you're set up, just take it slow. First test the depth of the cut, and when you're satisfied, sneak up close to the scored lines with the bit.

CLEAN-UP. After you've roughed out the mortise, a sharp chisel will complete the job. Just deepen the scored lines you made earlier with the utility knife and then carefully pare away the waste, as shown in Fig. 3.

LID MORTISES. Now the case mortises can be used to locate the mortises in the lid. But this time, you won't need the support block. And finally, try to make sure the pilot holes for the screws are centered so they don't move the hinges in the mortises. W

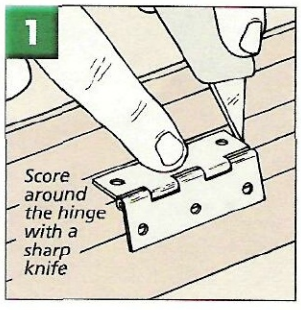

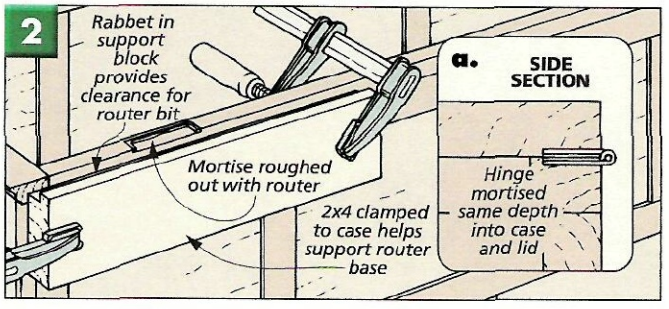

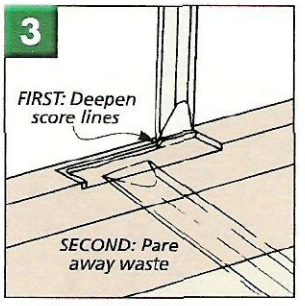

© 2003 August Home Publishing Company